ANDELI

# CATALOGUE

## ELECTRICAL PRODUCT

ANDELI GROUP CO.,LTD.

www.andeligroup.com

appliance items from ANDELI

Safety electrical


# About Andeli

Andeli Group Co., Ltd. was founded in 1993. It is located in the largest manufacturing hub of low-voltage electric equipment at Yueqing in China, which is called "the Electrical city of China".

Andeli is a leading Group in the electrical industry with production, scientific research, transport, import-export, trade & investment.

Andeli is one of the largest group in China. It has 12 share holding companies in ZHEJIANG,UAE, RUSSIA, Uganda and Brazil. It has over 300 cooperation companies & over 3000 employees with total assets of US$150,000,000 in area of 235,000 square meters.

Andeli regards quality of products as life. We have achieved ISO9001:2008 Quality Management System certificates, ISO14001:2004 Environmental Management System certificates, OHSAS18001:2007 Occupational health and safety Management System certificates along with Measure Detection System, Standardization System Certification and “CCC” for all products in the market. We have also passed ROHS, CE, CB, SEMKO, KEMA, INMETRO and many other international certifications.

Our R&D engineers are planning and Research to innovate a concrete advantage for the users, for actual product development and advance manufacturing process. We widely produce and sell over 300 series, more than 10000 type in Low- & High-voltage electrical devices, complete equipments, power transformers, cables, instruments, meters and welding equipments which are praised by all users in home & overseas. A number of new independent intellectual property right, intelligent appliances is moving into the market from us.

We are keeping our business principles for “Approaching the first-class management, producing the first-class products, providing the first-class service”. Andeli staffs are hard-working, constantly innovated and honest to all users & business partners to enjoy a better tomorrow together with us.

President of ANDELI Mr. Cheng Anlin




ANDELI

# Quality System& Product Certificates


ISO9001


OHSAS18001


ISO14001






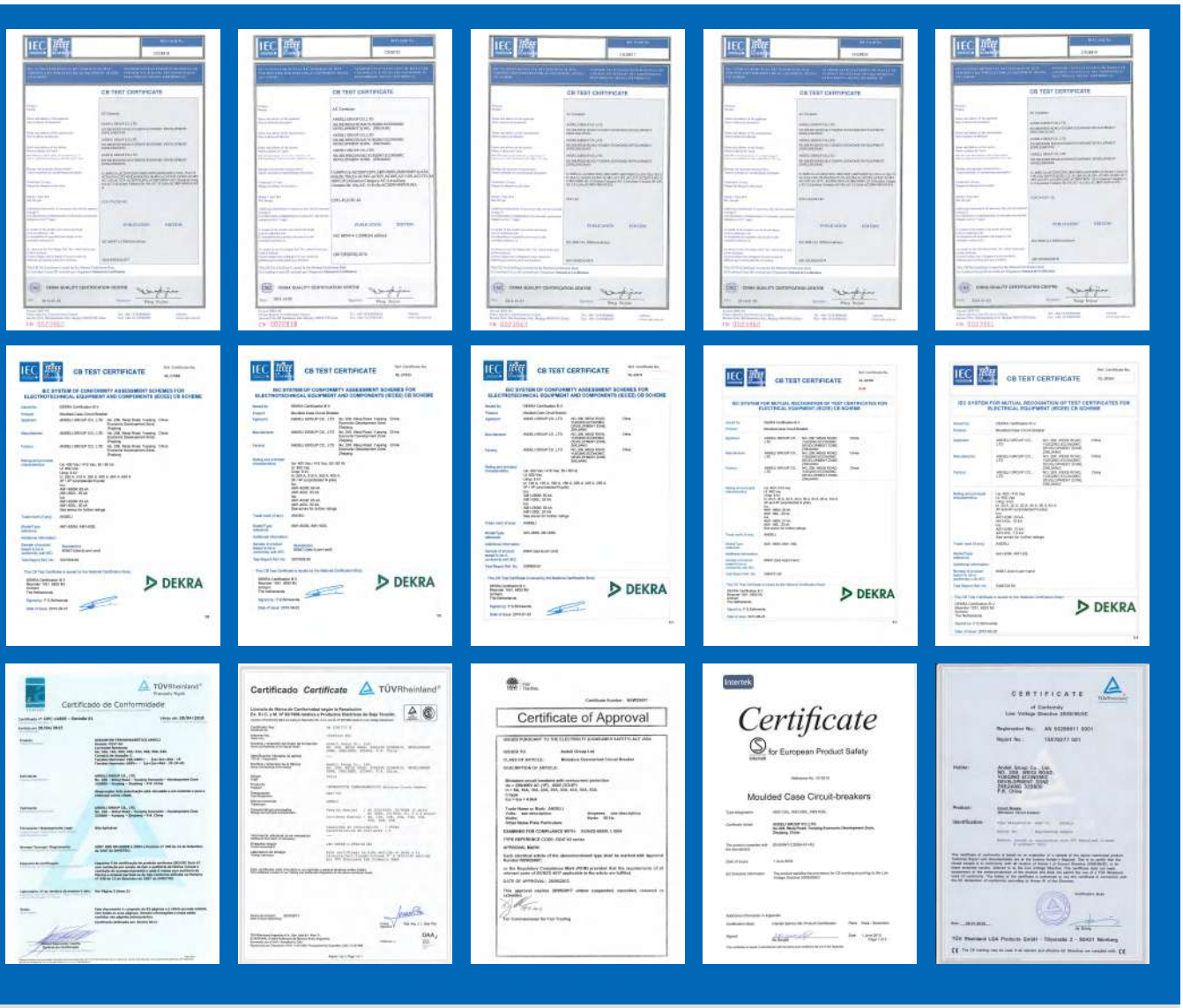
CB TEST CERTIFICATE
DEKRA
Certificado de Conformidade
Certificado Certificate
Certificate of Approval
Intertek
Certificate
for European Product Safety
Moulded Case Circuit-breakers
CERTIFICATE


Verification of Conformity
Test Verification of Conformity
EC DECLARATION OF CONFORMITY
ATC
CERTIFICATE
SGS
CERTIFICATE FOR CHINA COMPULSORY PRODUCT CERTIFICATION

# Power Equipment & Transformer & Solar & VCB

# SVC Automatic Voltage Stabilizer

## 1. Application

SVC automatic voltage stabilizer consists of contact voltage regulator,sampling control circuit and servomotor as well.It has excellent features,such as small waveform distortion,high efficiency,high power factor,free from the effect or frequency variation of supply.It can be widely used in most situations where the voltage stabilization is required.

SVC-500VA

SVC-1500VA

SVC-3000VA

SVC-10000VA

## 2. Specification

| | |
|---|---|
| Input voltage | 150V-250V (110V-250V) |
| Output voltage | 220V±3%, 110V±3% |
| Frequency | 50Hz/60Hz |
| Response time | 1sec. (against 10% input voltage deviation) |
| Efficiency | >90% |
| Ambient temperature | -10˚C~±40˚C |
| Relative humidity | <90% |
| Waveform distortion | Non-lack fidelity waveform |
| Power factor cosø | 0.8 |
| Insulation resistance | >5MΩ |

## 3. Outline and Packing Information

| Type | Outline(cm) | | | Weight(kg) | Qty/CTN |
|---|---|---|---|---|---|
| | L | W | H | | |
| SVC-500VA | 18.5 | 15 | 12.5 | 17 | 4PCS |
| SVC-1000VA | 21 | 18 | 14.5 | 20 | 4PCS |
| SVC-1500VA | 21 | 18 | 14.5 | 25 | 4PCS |
| SVC-2000VA | 27.5 | 23.5 | 18.5 | 7.8 | 1PC |
| SVC-3000VA | 29 | 23 | 22 | 9.8 | 1PC |
| SVC-5000VA | 45 | 24 | 18.5 | 14 | 1PC |
| SVC-7500VA | 47 | 26 | 22 | 19.5 | 1PC |
| SVC-5000VA | 28 | 30 | 46 | 19 | 1PC (Cabinet) |
| SVC-7500VA | 34 | 30 | 50 | 25 | 1PC (Cabinet) |
| SVC-10000VA | 44 | 32 | 56 | 31 | 1PC (Cabinet) |
| SVC-15000VA | 43 | 36 | 56 | 41 | 1PC (Cabinet) |
| SVC-20000VA | 47 | 40 | 78 | 79 | 1PC (Cabinet) |
| SVC-30000VA | 47 | 40 | 78 | 99.5 | 1PC (Cabinet) |

SVC-5000VA

SVC-10000VA

SVC-30000VA

# SVC(LED) Automatic Voltage Stabilizer

## 1. Application

SVC(LCD) automatic voltage stabilizer consists of contact voltage regulator,sampling control circuit and servomotor as well.It has excellent features,such as small waveform distortion, high efficiency,high power factor,free from the effect or frequency variation of supply.It can be widely used in most situations where the voltage stabilization is required.


SVC-D2000VA


SVC-D3000VA


SVC-D5000VA

## 2. Specification

| | |
|---|---|
| Input voltage | 150V-250V |
| Output voltage | 220V±3%, 110V±3% |
| Frequency | 50H/60Hz |
| Response time | <1sec. (against 10% input voltage deviation) |
| Efficiency | >90% |
| Ambient temperature | -10˚C~±40˚C |
| Relative humidity | <90% |
| Waveform distortion | Non-lack fidelity waveform |
| Power factor cosø | 0.8 |
| Insulation resistance | >5MΩ |

## 3. Outline and Packing Information

| Type | Outline(cm) | | | Weight(kg) | Qty/CTN |
|---|---|---|---|---|---|
| | L | W | H | | |
| SVC-D500VA | 18.5 | 15 | 12.5 | 17 | 4PCS |
| SVC-D1000VA | 21 | 18 | 14.5 | 20 | 4PCS |
| SVC-D1500VA | 21 | 18 | 14.5 | 25 | 4PCS |
| SVC-D2000VA | 27.5 | 23.5 | 18.5 | 7.8 | 1PC |
| SVC-D3000VA | 29 | 23 | 22 | 9.8 | 1PC |
| SVC-D5000VA | 45 | 24 | 18.5 | 14 | 1PC |
| SVC-D7500VA | 47 | 26 | 22 | 19.5 | 1PC |
| SVC-D10000VA | 47 | 26 | 22 | 24.5 | 1PC |
| SVC-D5000VA | 28 | 30 | 46 | 19 | 1PC (Cabinet) |
| SVC-D7500VA | 34 | 30 | 50 | 25 | 1PC (Cabinet) |
| SVC-D10000VA | 44 | 32 | 56 | 31 | 1PC (Cabinet) |
| SVC-D15000VA | 43 | 36 | 56 | 41 | 1PC (Cabinet) |
| SVC-D20000VA | 47 | 40 | 78 | 79 | 1PC (Cabinet) |
| SVC-D30000VA | 47 | 40 | 78 | 99.5 | 1PC (Cabinet) |


SVC-D10000VA


SVC-D20000VA


SVC-D30000VA

# SVC(NEW) Single-phase And Three-phase High Accuracy Full Automatic AC Voltage Stabilizer

SVC-500VA


SVC-3000VA

## Requirements for installation

| | |
|---|---|
| Please check the voltage stabilizer supply voltage and input voltage range (0.5kVA-5kVA) | 150V-250V → 220V<br>→ 110V |
| (0.5kVA-5kVA) | 150V-250V → 220V |
| Please pay attention to the cable connections between input terminal and power supply, and between output terminal and load |  |
| The output voltage of the instrument shall be the same as that of voltage stabilizer |  |
| Please adjust the selector switch of input voltage to a voltage step that is the same as power supply | 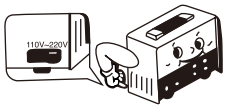 |
| Mustn't use the voltage stabilizer in case of overload |  |
| Please use good cables for connecting | 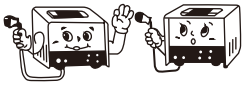 |
| If the fuse is damaged, please examine your voltage stabilizer and load |  |
| Please use the fuses of same rated values, mustn't use the nonrated fuses or wires |  |
| Install it in the dry places without corrosive gas and water |  |

# SVC-D(LCD) Series Fully Automatic A.C. Voltage Regulator

## 1. Application

SVC-D1000VA

SVC-D Series AC automatic voltage regulator is the latest product studied and produced by ourselves. These products adopt 8 digits CPU control produced by the well-known MOTOROLA company, which can stabilize the precision and set up the delay time. The products also have many protection functions on delay, over-voltage invert-delay, lack voltage, over load invert-delay, lack voltage, over load, over temperature, machine malfunction and so on. They have digital display, blue-screen lightproof, dynamic panel display and it can show the working status of the machine. When the machine works abnormally, on the panel there is corresponding due and short or long warning.

SVC-D3000VA

| Specification | 500VA,1000VA,1500VA,2000VA,3000VA,5000VA |
|---|---|
| Input Voltage | AC 150V~250V AC 70V~130V |
| Output Voltage | AC 220 110V |
| Stabilization Precision | ±3% |
| Frequency | 50Hz,60HZ |
| Delay Time | Long:180s; Short:5s |
| Over-voltage Protection Value | 250V/5s delay; 275V/2s delay; 295V/1s delay; 305V/0s |
| Lack-voltage Protection Value | 180V/5s delay |
| Over-load Protection Value | 2.8times than rated capacity |
| Over-temperature Protection Value | 90˚C |
| Load Capacity Factor | Cos 0.9 |
| Regulating Time | When input varies 10%, less than 1s |
| Waveform Distrotion | No additional waveform distortion |
| Reactance Strength | 1500V/1min |
| Insulation Resistance | >5MΩ |
| Insulation Grade | E grade |
| Environment | Temperature: -10˚C~+40˚C Humidity:<90% |

# SVC(Three) Automatic Voltage Stabilizer

## 1. Application

SVC automatic regulator voltage consists of contact voltage regulator,sampling control circuit and servomotor as well.It has excellent features,such as small waveform distortion,high efficiency, high power factor,free from the effect or frequency variation of supply.It can be widely used in most situations where the voltage stabilization is required.

SVC-6000VA-3

## 2. Specification

| | |
|---|---|
| Input voltage | 195V-430,280V-430V |
| Output voltage | 380V±3% |
| Phase | Three phase |
| Frequency | 50Hz/60Hz |
| Response | <1 sec. (against 10% input voltage deviation) |
| Efficiency | Better than 90% |
| Ambient temperature | -10˚C~+40˚C |
| Relative humidity | Less than 90% |
| Waveform | Non-lack fidelity waveform |
| Insulation resistance | >5MΩ |

SVC-9000VA-3

## 3. Outline and Packing Information

| Type | Outline(cm) | | | Qty/CTN |
|---|---|---|---|---|
| | L | W | H | |
| SVC-1500VA-3 | 48.5 | 22.5 | 17 | 1PCS |
| SVC-3000VA-3 | 48.5 | 22.5 | 17 | 1PCS |
| SVC-4500VA-3 | 48.5 | 22.5 | 17 | 1PCS |
| SVC-6000VA-3 | 39 | 31.5 | 77 | 1PCS |
| SVC-9000VA-3 | 43.5 | 36 | 77 | 1PCS |
| SVC-15000VA-3 | 48 | 36 | 70 | 1PCS |
| SVC-20000VA-3 | 51.5 | 40.5 | 85 | 1PCS |
| SVC-30000VA-3 | 59 | 46 | 109 | 1PCS |
| SVC-40000VA-3 | 64.5 | 52.5 | 109 | 1PCS |
| SVC-50000VA-3 | 64.5 | 52.5 | 109 | 1PCS |
| SVC-60000VA-3 | 64.5 | 52.5 | 109 | 1PCS |
| SVC-75000VA-3 | 67 | 56.5 | 130 | 1PCS |
| SVC-100000VA-3 | 67 | 56.5 | 130 | 1PCS |

SVC-15000VA-3

SVC-30000VA-3

SVC-40000VA-3

# SVC(LED)(Three) Automatic Voltage Stabilizer

## 1. Application

SVC-D6000VA-3

SVC(LCD)(Three) automatic regulator voltage consists of contact voltage regulator,sampling control circuit and servomotor as well.It has excellent features,such as small waveform distortion, high efficiency,high power factor,free from the effect or frequency variation of supply.It can be widely used in most situations where the voltage stabilization is required.

## 2. Specification

| | |
|---|---|
| Input voltage | 195V-430,280V-430V |
| Output voltage | 380V±3% |
| Phase | Three phase |
| Frequency | 50Hz/60Hz |
| Response | <1 sec. (against 10% input voltage deviation) |
| Efficiency | Better than 90% |
| Ambient temperature | -10˚C~+40˚C |
| Relative humidity | Less than 90% |
| Waveform | Non-lack fidelity waveform |
| Insulation resistance | >5MΩ |

SVC-D9000VA-3

## 3. Outline and Packing Information

| Type | Outline(cm) | | | Qty/CTN |
|---|---|---|---|---|
| | L | W | H | |
| SVC-D1500VA-3 | 48.5 | 22.5 | 17 | 1PCS |
| SVC-D3000VA-3 | 48.5 | 22.5 | 17 | 1PCS |
| SVC-D4500VA-3 | 48.5 | 22.5 | 17 | 1PCS |
| SVC-D6000VA-3 | 39 | 31.5 | 77 | 1PCS |
| SVC-D9000VA-3 | 43.5 | 36 | 77 | 1PCS |
| SVC-D15000VA-3 | 48 | 36 | 70 | 1PCS |
| SVC-D20000VA-3 | 51.5 | 40.5 | 85 | 1PCS |
| SVC-D30000VA-3 | 59 | 46 | 109 | 1PCS |
| SVC-D40000VA-3 | 64.5 | 52.5 | 109 | 1PCS |
| SVC-D50000VA-3 | 64.5 | 52.5 | 109 | 1PCS |
| SVC-D60000VA-3 | 64.5 | 52.5 | 109 | 1PCS |
| SVC-D75000VA-3 | 67 | 56.5 | 130 | 1PCS |

SVC-D15000VA-3

SVC-D30000VA-3

SVC-D75000VA-3

# SAR Series Fully Automatic A.C. Voltage Regulator


SAR-2000VA

## 1. Application

These special products of SAR series Voltage Regulator have advanced equipment, abundant technology, reliable quality and distinguished credit. SAR series are designed at JS3717-84 request, these products conform to fully automatic control of integrated circuit. They are of quick speed, good reliable of sensitive action, convenient use and assure the stale resuit. They are suitable for families, schools, enterprises, hotels and diets etc., where need a stable civil power. They can make the illumination lamp, TV set, air-conditioner, refrigerator, computer and copy machine etc. work at a normal condition and have a long using time.


SAR-5000VA

## 2. Technical specification

| Frequency | Regulating Time | Temperature Rise | Withstand Voltage | Low Voltage Protection | Over Voltage Protection |
|---|---|---|---|---|---|
| 50-60Hz | Less Than 0.5 | <60˚C | Accord With Ministry Issued Standard | Output 100V/160V | Output 270V/260V |

| Model | Range | Input Civil Power Voltage(V) | Output Precision of Stabling Voltage |
|---|---|---|---|
| 500VA To 5000VA | Current | 160-260 | 220V±5% |
| | Over-Low Voltage | 130-270 | 220V±8% |
| | Special Over-Low Voltage | 100-270 | 220V±10% |
| | High Precision of Stabling Voltage | 160-270 | 220V±3% |

# SVR Series Fully Automatic Voltage Regulator


SVR-1000VA


SVR-1500VA


SVR-3000VA


SVR-5000VA


SVR-10000VA

## 1. Application

SVR Series voltage regulators have advanced equipment, abundant technology, reliable quality and distinguished credit,AVR,AR series are designed at JB3717-84 request. These products conform to fully automatic control of integrated circuit. They are of quick speed, good reliable of sensitive action, convenient use and assure the stale result. They are suitable for families, schools, enterprises, hotels and diets etc., where need a stable civil power. They can make the illumination lap, TV set, refrigerator, air-conditioner, computer and copy machine etc. work at a normal condition and have a long using time.

## 2. Technical Specification

| Frequency | Regulating Time | Temperature Rise | Withstand Voltage | Low Voltage Protection | Over Voltage Protection |
|---|---|---|---|---|---|
| 50-60Hz | Less Than 0.5 | <60˚C | Accord With Ministry Issued Standard | Output 160V | Output 260V |

| Model | Range | Input Civil Power Voltage(V) | Output Precision of Stabling Voltage |
|---|---|---|---|
| 500VA To 5000VA | Current | 160-260 | 220V±3% |
| | Over-Low Voltage | 130-260 | 220V±8% |
| | Special Over-Low Voltage | 115-265 | 220V±10% |
| | High Precision of Stabling Voltage | 160-265 | 220V±5% |

# TSD III Series Wall Mount Automatic Voltage Regulator


## 1.TSD III series

Wall Mount Servo Motor Automatic Voltage Regulator

- Input Range:125V~270(4 relays),100V~270V(5 relats),80V~270V(6 relays)
- Over voltafe & Under voltage protection
- Over temperature protection
- Reaction time(voltage stabilization time)≤200ms
- Short delay(3~6s)&Long delay(3~6m)

## 2. Product Description

TSDIII Single Phase AC Stabilizer

TSDIII series servo type AC voltage stabilizer, which is an improved design of SVC series products, which comes with superior quality, enhanced functions and modern design. It is capable of being mounted on wall, saving space significantly.

It mainly features in a modern design and various protections against, over-voltage, under-voltage, overload, over temperature and time delay, enjoying a great popularity for residential, hospital, commercial applications etc.

## 3. Product Dominance

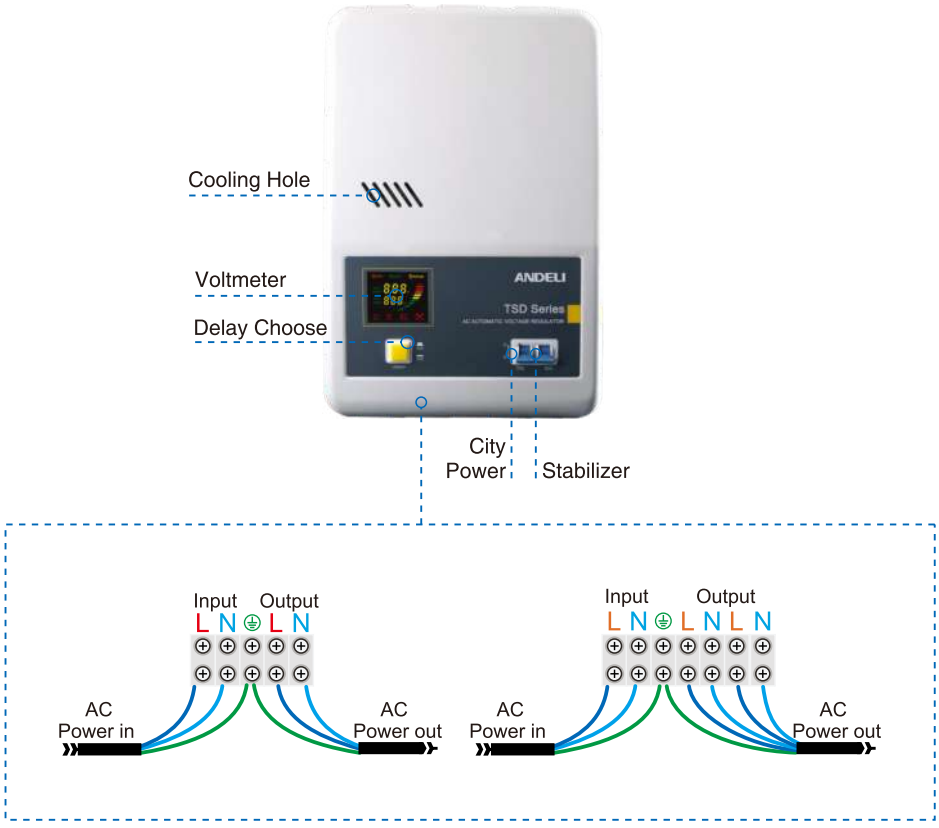

## 4. Technical Parameter

| Specification | | 500VA | 1000VA | 1500VA | 2000VA | 3000VA |
|---|---|---|---|---|---|---|
| Input | Phase | Single phase | | | | |
| | Voltage | AC 150V-250V/70V-150V | | | | |
| | Frequency | 50Hz / 60Hz | | | | |
| Output | Voltage | 220V/230V/240V±3% or 110V/120V/130V±3%(Optional) | | | | |
| | Capacity | 400W | 800W | 1200W | 1600W | 2400W |
| | Frequency | 50Hz 60Hz | | | | |
| Protection | Low voltage | AC 184V±4V | | | | |
| | Over voltage | AC 246±4V | | | | |
| | Time Delay | 3-7sec/3-7min Selectable | | | | |
| | Overload/ short circuit | YES | | | | |
| Packaging | Pcs per Carton | 4 | | | 1 | |
| | Shipping Wt.(Kg) | 16.6 | 21.35 | 23.15 | 7.9 | 11.45 |
| | Packing dimensions(mm) | 245×340×425 | 495×285×390 | 355×295×240 | 365×275×380 | 540×325×270 |
| Efficiency | AC-AC | > 95% | | | | |
| Acoustic | Noise level | ≤50dB | | | | |
| Environment | Temperature | -5℃ to 40℃ | | | | |
| | Humidity | 20% to 90% | | | | |
| QTY(pcs) | 20FT | 3200 | 2100 | 2100 | 1120 | 1120 |

| Specification | | 5000VA | 7500VA | 10000VA |
|---|---|---|---|---|
| Input | Phase | Single phase | | |
| | Voltage | AC 150V-250V/70V-150V | | |
| | Frequency | 50Hz/60Hz | | |
| Output | Voltage | 220V/230V/240V±3% or 110V/120V/130V±3%(Optional) | | |
| | Capacity | 4000W | 6000W | 8000W |
| | Frequency | 50Hz / 60Hz | | |
| Protection | Low voltage | AC 184V±4V | | |
| | Over voltage | AC 246±4V | | |
| | Time Delay | 3-7sec/3-7min Selectable | | |
| | Overload/ short circuit | YES | | |
| Packaging | Pcs per Carton | 1 | | |
| | Shipping Wt.(Kg) | 20.8 | 27.65 | 30.5 |
| | Packing dimensions(mm) | 540×325×270 | 610×360×305 | 370×330×580 |
| Efficiency | AC-AC | > 95% | | |
| Acoustic | Noise level | ≤50dB | | |
| Environment | Temperature | -5℃ to 40℃ | | |
| | Humidity | 20% to 90% | | |
| QTY(pcs) | 20FT | 600 | 420 | 420 |

# AVR III Single Phase Relay Type Automatic Voltage Regulator

## 1. AVR III Series

Single Phase Automatlc Voltage Regulator

- Over voltage protection
- Over current protection
- Over temperature protection
- Component Damage Protection
- Delay protection
- Over load protection
- Under voltage protection

## 2. Product Description

AVRIII Single Phase AC Stabilizer

AVRIII high-accuracy intelligent AC regulator is a new type of update product which is researched and developed our R&D. Compared with old model ,it has low loss, instant overload protection, low noise and long lifetime.

Features of AVRII High-Accuracy Intelligent AC Regulator(AVR:500VA-10KVA)

1.SMT(Surface Mount Technology)PCB, auto diagnose, lower defective rate

2.Advanced Micro control Unit delivers more stable performance

3.Wide input voltage range(from 80-270V)

4.High precision output up to ±8%(±6% available with normal input voltage range 140-260V)

5.Protection against brownout/over voltage/short cicuit/over load/over temperature computer stabilizer

## 3. Product Instruction

Adopt American "Freescale CPU"


Digital signal processor

Shorter relay action time

Relay failure detection

Improved reliability in high temp and overload

| Input | Output | Precision |
|---|---|---|
| 80~270V | 220V | 10% |
| 100~270V | 220V | 10% |
| 125~270V | 220V | 8% |
| 140~280V | 220V | 10% |
| 140~260V | 220V | 5% |
| 176~269V | 220V | 5% |
| According to the requirements | 110V | 10% |

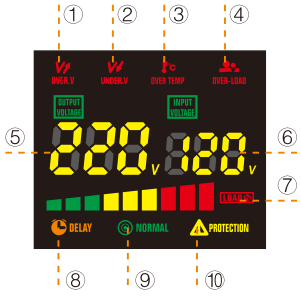


| | |
|---|---|
| 1.O/P Voltage Above high limit | 6.Input Voltage |
| 2.O/P Voltage Under low limit | 7.Load |
| 3.Over Temperature | 8.Delay Voltage |
| 4.Overload | 9.Normal |
| 5.Output Voltage | 10.Protection(Fault Mode) |

## 4. Technical Parameter

| Specification | | 500VA | 1000VA | 1500VA | 2000VA |
|---|---|---|---|---|---|
| Input | Phase | Single phase | | | |
| | Voltage | AC 80-260V/AC100V-280V/AC150V-270V/ 140V-260V/176V-264V(optional) | | | |
| | Frequency | 50Hz / 60Hz | | | |
| Output | Voltage | 220V/±10%/220V±8%/220V±5%/220V±5% { 110V±8%(±5%Optional) } | | | |
| | Capacity | 400W | 800W | 1200W | 1600W |
| | Frequency | 50Hz 60Hz | | | |
| Protection | Low voltage | AC 186V±4V | | | |
| | Over voltage | AC 246±4V | | | |
| | Time Delay | 6s/180s | | | |
| | Overload/ short circuit | YES | | | |
| Packaging | Pcs per Carton | 4 | | | |
| | Shipping Wt.(Kg) | 26.8 | 18.5 | 20.4 | 25 |
| | Packing dimensions(mm) | 470×185×245 | | 560×275×265 | |

| Specification | | 3000VA | 5000VA | 7500VA | 10000VA |
|---|---|---|---|---|---|
| Input | Phase | Single phase | | | |
| | Voltage | AC 80-260V/AC100V-280V/AC150V-270V/ 140V-260V/176V-264V(optional) | | | |
| | Frequency | 50Hz/60Hz | | | |
| Output | Voltage | 220V/230V/240V±3% or 110V/120V/130V±3%(Optional) | | | |
| | Capacity | 2400W | 4000W | 6000W | 8000W |
| | Frequency | 50Hz / 60Hz | | | |
| Protection | Low voltage | AC 186V±4V | | | |
| | Over voltage | AC 246±4V | | | |
| | Time Delay | 6s/180s | | | |
| | Overload/ short circuit | YES | | | |
| Packaging | Pcs per Carton | 1 | | | |
| | Shipping Wt.(Kg) | 11.45 | 20.8 | 27.65 | 30.5 |
| | Packing dimensions(mm) | 640×380×350 | | 470×260×290 | |

# PR II Series Colourful Display Portable Automatic Voltage Regulator

## 1.PR II Series

LED Display Portable Automatic Voltage Regulator 7 kinds of protections

- Over voltage protection
- Over current protection
- Over temperature protection
- Component damage Protection
- Short delay(3~6s)& Long delay(3~6m)
- Over load protection
- Under-voltage protection

## 2.Product Description

PRII Single Phase AC Stabilizer

- Over-voltage protection
- Over-current protection
  We have double protecion functions: Fuse and PCB.
- Over-temperature protection
  Though 120°C is our temperature setting, our metail of transformer can stand 180°C.
- Component-Damage Protection
  Any component damage will not occur equipment burned,it will not affect other components.
  When abnormality happens, AVR can be protected with 0.065s.
- Delay Protection
  If city power is suddenly off and return at once, it maybe lead appliances damaged.
  There is 5s delay befor the AC resume.
- Over-load protection
  After 5 times testing current over 1.2 times of rated current ,AVR will shut down and alarm.
- Under-voltage protection
  Please note that our AVR voltage rangle is 125-270V,176-264V,if voltage is less than 110V,you our stabilizer is not workable.

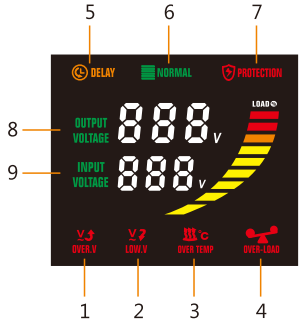


| | |
|---|---|
| 1.O/P Voltage Above high limit | 6.Normal |
| 2.O/P Voltage Under low limit | 7.Protection(Fault Mode) |
| 3.Over Temperature | 8.Output Voltage |
| 4.Overload | 9.Protection(Fault Mode) |
| 5.Output Voltage | 10.Fault Mode |

| | |
|---|---|
| Short Delay Mode | Sounding each 1 Secs |
| Long Delay Mode | Sounding each 5 Secs |
| Overload Mode | Sounding each 0.5 Secs |
| Over/Under Voltage Mode | Sounding each 3 Secs |
| Under Frequency Mode | Sounding each 2 Secs |
| Over Temperture | Sounding each 4 Secs |
| Fauit Mode | Sounding Continuous |

## 3.Technical Parmeter

| Specification | | 500VA | 1000VA | 1500VA | 2000VA | 3000VA |
|---|---|---|---|---|---|---|
| Input | Phase | Single phase | | | | |
| | Voltage | AC125V-270V/140V-260V/176V-264V (Optional) | | | | |
| | Frequency | 50Hz/60Hz | | | | |
| Output | Capacity | 500VA | 1000VA | 1500VA | 2000VA | 3600VA |
| | | 250W | 500W | 750W | 1000W | 1800W |
| | Frequency (inverter mode) | 50Hz/60Hz | | | | |
| Protection | Spiles&surge suppression | Yes | | | | |
| | Over voltage | Yes | | | | |
| | Overload/short circuit | Yes | | | | |
| Efficiency | AC-AC | 0.5-0.7 | | | | |
| Acoustic | Noise level | ≤50dB | | | | |
| Environment | Temperature | -5°C to 60°C | | | | |
| | Humidity | 20% to 90% | | | | |
| Mechanical | Net Wt(kg) | 1.3 | 1.6 | 1.75 | 1.8 | 2.8 |
| | Shipping Wt(kg) | 11 .9 | 14.3 | 15.5 | 16.8 | 23.5 |
| | QTY/carton | 8 | | | | |
| | Dimensions(mm) | 528×320×360 | | | | |

# DBW SBW Compensated Voltage Stabilizer

## 1. Application

DBW SBW compensated voltage stablilizer is a contact adjustable automatic voltage compensation high-power regulating power device. When voltage from supply network is varied or due to loading current effect, it automatically regulates the output voltage to ensure the normal function of the varied of electric equipments.

DBW-100KVA

## 2. Specification

| | |
|---|---|
| Input voltage | Single phase: 220V±20% or 220V±30%<br>Three phases four-line: 380V±20% or 380V±30% |
| Output voltage | Single phase: 220V±2%; Three phases: 380V±2% |
| Phase | Single phase; Three phases four-line |
| Frequency | 50Hz/60Hz |
| Response | within 1 sec.(against 10% input voltage deviation) |
| Efficiency | Better than 95% |
| Ambient temperature | -10°C~+40°C |
| Waveform | Non-lack fidelity waveform |
| Insulation restortion | Better than 5MΩ |
| Overload | Double rated current, one min |
| Protection | Overvoltage, overcurrent, feed phases |

SBW-150KVA

## 3. Outline and Packing

| Type | Outpower(kVA) | Outline(cm) | Weight(Kg) | Cabinet |
|---|---|---|---|---|
| DBW-20kVA | 20 | 70 x 50 x 135 | 283 | 1 |
| DBW-30kVA | 30 | 70 x 50 x 135 | 310 | 1 |
| DBW-40kVA | 40 | 70 x 50 x 135 | 330 | 1 |
| DBW-50kVA | 50 | 80 x 60 x 150 | 360 | 1 |
| DBW-60kVA | 60 | 80 x 60 x 150 | 380 | 1 |
| DBW-70kVA | 70 | 80 x 60 x 150 | 100 | 1 |
| DBW-80kVA | 80 | 90 x 70 x 170 | 430 | 1 |
| DBW-100kVA | 100 | 90 x 70 x 170 | 480 | 1 |
| SBW-50kVA | 50 | 80 x 62 x 135 | 350 | 1 |
| SBW-60kVA | 60 | 80 x 62 x 135 | 370 | 1 |
| SBW-100kVA | 110 | 85 x 52 x 150 | 420 | 1 |
| SBW-150kVA | 150 | 100 x 72 x 170 | 550 | 1 |
| SBW-180kVA | 180 | 100 x 72 x 170 | 570 | 1 |
| SBW-200kVA | 200 | 100 x 72 x 170 | 630 | 1 |
| SBW-225kVA | 225 | 110 x 80 x 180 | 660 | 1 |
| SBW-250kVA | 250 | 110 x 80 x 200 | 700 | 1 |
| SBW-300kVA | 300 | 110 x 80 x 210 | 740 | 1 |
| SBW-320kVA | 320 | 110 x 80 x 210 | 760 | 1 |
| SBW-400kVA | 400 | 110 x 80 x 210/2 | 1100 | 2 |
| SBW-500kVA | 500 | 110 x 80 x 210/2 | 1500 | 2 |
| SBW-600kVA | 600 | 110 x 80 x 210/2 | 2200 | 2 |
| SBW-800kVA | 800 | 85 x 100 x 220/3 | 2800 | 3 |
| SBW-1000kVA | 1000 | 85 x 100 x 220/3 | 3500 | 3 |
| SBW-1200kVA | 1200 | 85 x 100 x 220/3 | 4100 | 3 |
| SBW-1600kVA | 1600 | 110 x 110 x 220/4 | 5560 | 4 |
| SBW-2000kVA | 2000 | 110 x 110 x 220/4 | 7100 | 4 |

SBW-300KVA

# JJW SJW A.C. Precision Purity Regulated Power Supply


JJW-1000VA

## 1. JJW SJW A.C. Precision Purity Regulated Power Supply Feature

A.C. Precision purity regulated power supply is our new, high characteristic electronic A.C. regulated equipment as KUPA doctor's theory, combining Asymmetrical Digital Subscriber Loop colander net, which integrates multi-functions such as purity regulation and anti-disturbance. They are of wide range in regulation, fast speed in response, high precision in regulation etc.,to refrain all kinds of noise from power net and disturbance from peak. They are your first choice among of A.C. regulated power supply at present, which are 614 series electronic A.C. regulated power supply and ideal substitution regulated power supply.

It often happens that the electrical equipment are damaged because of lack of power. The experts of power point out most 80% malfunctions of computer are caused by A.C. power supply directly or indirectly. So as to ensure the safe operation of electrical equipment, the power supply must be improved. Our products fulfill the requirements in such places for his spurious characteristic. Our products are suitable for the following fields: science department, university, corporation, hospital, broadcasting station, communication equipment, traffic system, test equipment and all automatic production equipment.


JJW-2000VA

## 2. JJW/2 A.C. Intelligence Percision Purity Regulated Power Supply Feature

JJW/2 A.C. intelligence precision purity regulated power supply is new high characteristic electronic A.C. regulated power supply, which is one of advanced characteristic A.C. regulated power supply at present, and widely suitable for high precision electrical equipment and general electrical power equipment. In America, the products have been used into military and aviation etc. A.C. intelligence precision purity regulated power supply adopt advanced technology, integration purity, regulation, anti-disturbance and automatic protection etc. With the advantages such as wide range in regulation, fast speed in response, high precision, anti-disturbance, low distortion, strong capacity in anti-load impact, long life, low noise and so on.


JJW-3000VA

## 3. Capability index

Range of output voltage
Single phase:170-270V Three phases:310-450V
Range of input regulation: Single phase:185-250V, output:220±5%
Three phases:330-450V, output:380±0.5%
Input frequency:50Hz±5%
Alarm value of output voltage
Single phase:output higher than 242V or lower than 198V
Three phases:output higher than 418V or lower than 342V
Value of protection of over voltage(output loop cut down)
Single phase:output voltage more than 247V
Three phases:output voltage more than 427V
Value of protection of short voltage(output loop cut down)
Single phase:output lower than 193V
Value of protection of over current:l .2 times larger than rated current
Response time of instant voltage change: advantage over two weeks of power
Signle pulse restraint of instant high power
Single phase input 3000V, while 75us single pulse, the remained output voltage <30V
Output wave distortion:<3%
Working ambient temperature:-100C±400C
Waste power: ≤l .5%

# Switching Power Supply

S-15-12

15W Single Output Switching Power Supply

| Model No. | Ouput | Tol. | R & N | Effi. |
|---|---|---|---|---|
| S-15-5 | 5V,0~3.0A | ± 2% | 50mV | 65% |
| S-15-12 | 12V,0~1.3A | ± 1% | 50mV | 68% |
| S-15-24 | 24V,0-0.7A | ± 1% | 50mV | 73% |

25W Single Output Switching Power Supply

| Model No. | Ouput | Tol. | R & N | Effi. |
|---|---|---|---|---|
| S-25-5 | 5V,0~5.0A | ± 2% | 50mV | 72% |
| S-25-12 | 12V,0~2.1A | ± 1% | 100mV | 76% |
| S-25-15 | 15V,0~1.7A | ± 1% | 100mV | 77% |
| S-25-24 | 24V,0~1.1A | ± 1% | 100mV | 80% |

35W Single Output Switching Power Supply

| Model No. | Ouput | Tol. | R & N | Effi. |
|---|---|---|---|---|
| S-35-5 | 5V,0~7.0A | ± 2% | 75mV | 70% |
| S-35-12 | 12V,0~3.0A | ± 1% | 100mV | 76% |
| S-35-15 | 15V,0~2.4A | ± 1% | 100mV | 78% |
| S-35-24 | 24V,0~1.5A | ± 1% | 100mV | 78% |

S-40-12

40W Single Output Switching Power Supply

| Model No. | Ouput | Tol. | R & N | Effi. |
|---|---|---|---|---|
| S-40-5 | 5V,0~8.0A | ± 2% | 75mV | 72% |
| S-40-12 | 12V,0~3.5A | ± 1% | 100mV | 76% |
| S-40-15 | 15V,0~2.8A | ± 1% | 100mV | 76% |
| S-40-24 | 24V,0~1.8A | ± 1% | 100mV | 78% |

50W Single Output Switching Power Supply

| Model No. | Ouput | Tol. | R & N | Effi. |
|---|---|---|---|---|
| S-50-5 | 5V,0~10A | ± 2% | 75mV | 71% |
| S-50-12 | 12V,0~4.2A | ± 1% | 100mV | 78% |
| S-50-15 | 15V,0~3.4A | ± 1% | 100mV | 78% |
| S-50-24 | 24V,0~2.1A | ± 1% | 100mV | 82% |

60W Single Output Switching Power Supply

| Model No | Ouput | Tol. | R & N | Effi. |
|---|---|---|---|---|
| S-60-5 | 5V,0~12A | ± 2% | 120mV | 73% |
| S-60-12 | 12V,0~5.0A | ± 1% | 120mV | 76% |
| S-60-15 | 15V,0~4.0A | ± 1% | 150mV | 77% |
| S-60-24 | 24V,0~2.5A | ± 1% | 150mV | 79% |

S-75-12

70W Single Output Switching Power Supply

| Model No. | Ouput | Tol. | R & N | Effi. |
|---|---|---|---|---|
| S-75-5 | 5V,0~15A | ± 2% | 80mV | 72% |
| S-75-12 | 12V,0~6.3A | ± 2% | 80mV | 77% |
| S-75-15 | 15V,0~5.0A | ± 2% | 80mV | 79% |
| S-75-24 | 24V,0~3.2A | ± 1% | 100mV | 80% |

75W PFC Single Output Switching Power Supply

| Model No. | Ouput | Tol. | R & N | Effi. |
|---|---|---|---|---|
| SP-75-5 | 5V,0~15A | ± 2% | 80mV | 72% |
| SP-75-12 | 12V,0~6.3A | ± 2% | 80mV | 77% |
| SP-75-15 | 15V,0~5.0A | ± 2% | 80mV | 79% |
| SP-75-24 | 24V,0~3.2A | ± 1% | 100mV | 80% |


S-100-12

100W Single Output Switching Power Supply

| Model No. | Ouput | Tol. | R & N | Effi. |
|---|---|---|---|---|
| S-100-3 | 3V,0~20A | ± 2% | 100mV | 70% |
| S-100-5 | 5V,0~20A | ± 2% | 100mV | 78% |
| S-100-7.5 | 7.5V,0~13.6A | ± 1% | 100mV | 80% |
| S-100-10 | 10V,0~10A | ± 1% | 100mV | 80% |
| S-100-12 | 12V,0~8.5A | ± 1% | 100mV | 81% |
| S-100-15 | 15V,0~6.7A | ± 1% | 100mV | 81% |
| S-100-18 | 18V,0~5.6A | ± 1% | 100mV | 82% |
| S-100-24 | 24V,0~4.5A | ± 1% | 100mV | 84% |
| S-100-27 | 27V,0~3.7A | ± 1% | 100mV | 84% |
| S-100-48 | 48V,0~2.0A | ± 1% | 100mV | 84% |
| S-100F-5 | 5V,0~20A | ± 2% | 100mA | 76% |
| S-100F-7.5 | 7.5V,0~13.5A | ± 1% | 125mA | 78% |
| S-100F-12 | 12V,0~8.5A | ± 1% | 125mA | 80% |
| S-100F-15 | 15V,0~6.7A | ± 1% | 125mA | 81% |
| S-100F-24 | 24V,0~4.5A | ± 1% | 125mA | 83% |
| S-100F-48 | 48V,0~2.2A | ± 1% | 125mA | 84% |


S-120-12

120W Single Output Switching Power Supply

| Model No. | Ouput | Tol. | R & N | Effi. |
|---|---|---|---|---|
| S-120-3 | 3V,0~24A | ± 2% | 100mV | 70% |
| S-120-5 | 5V,0~24A | ± 2% | 100mV | 78% |
| S-120-7.5 | 7.5V,0~16A | ± 1% | 100mV | 80% |
| S-120-10 | 10V,0~12A | ± 1% | 100mV | 80% |
| S-120-12 | 12V,0~10A | ± 1% | 100mV | 81% |
| S-120-15 | 15V,0~8A | ± 1% | 100mV | 81% |
| S-120-18 | 18V,0~6.6A | ± 1% | 180mV | 82% |
| S-120-24 | 24V,0~5A | ± 1% | 240mV | 84% |
| S-120-27 | 27V,0~4.5A | ± 1% | 240mV | 84% |
| S-120-48 | 48V,0~2.5A | ± 1% | 240mV | 84% |

145W Single Output Switching Power Supply

| Model No. | Ouput | Tol. | R & N | Effi. |
|---|---|---|---|---|
| S-145-5 | 5V,0~25A | ± 2% | 120mA | 72% |
| S-145-7.5 | 7.5V,0~18A | ± 2% | 120mA | 74% |
| S-145-12 | 12V,0~12A | ± 2% | 120mA | 77% |
| S-145-13.5 | 13.5V,0~10.7A | ± 2% | 120mA | 78% |
| S-145-15 | 15V,0~9.6A | ± 2% | 80mA | 79% |
| S-145-24 | 24V,0~6.0A | ± 1% | 150mA | 80% |
| S-145-27 | 27V,0~5.4A | ± 1% | 150mA | 80% |
| S-145-48 | 48V,0~3.0A | ± 1% | 150mA | 80% |


S-150-12

150W Single Output Switching Power Supply

| Model No. | Ouput | Tol. | R & N | Effi. |
|---|---|---|---|---|
| S-150-7 | 5V,0~30A | ± 2% | 150mV | 78% |
| S-150-7.5 | 7.5V,0~20.0A | ± 1% | 150mV | 80% |
| S-150-9 | 9V,0~16.7A | ± 1% | 180mV | 80% |
| S-150-12 | 12V,0~12.5A | ± 1% | 180mV | 82% |
| S-150-15 | 15V,0~10.0A | ± 1% | 180mV | 84% |
| S-150-24 | 24V,0~6.5A | ± 1% | 240mV | 85% |
| S-150-48 | 48V,0~3.2A | ± 1% | 240mV | 87% |
| S-150-13.5 | 13.5V,0~11.2A | ± 1% | 180mV | 83% |
| S-150-27 | 27V,0~5.6A | ± 1% | 240mV | 86% |

S-200-12

200W PFC Single Output Switching Power Supply

| Model No. | Ouput | Tol. | R & N | Effi. |
|---|---|---|---|---|
| SP-200-3.3 | 3.3V,0~40.0A | ± 2% | 100mA | 72% |
| SP-200-5 | 5V,0~40.0A | ± 2% | 100mA | 77% |
| SP-200-12 | 12V,0~16.7A | ± 2% | 100mA | 85% |
| SP-200-15 | 15V,0~13.4A | ± 2% | 100mA | 84% |
| SP-200-24 | 24V,0~8.40A | ± 2% | 125mA | 87% |
| SP-200-48 | 48V,0~4.20A | ± 2% | 250mA | 86% |

200W Single Output Switching Power Supply

| Model No. | Ouput | Tol. | R & N | Effi. |
|---|---|---|---|---|
| S-200-3.3 | 3.3V,0~40.0A | ± 2% | 100mV | 65% |
| S-200-5 | 5V,0~40.0A | ± 2% | 100mV | 71% |
| S-200-7.5 | 7.5V,0~26.7A | ± 2% | 100mV | 76% |
| S-200-12 | 12V,0~16.7A | ± 2% | 100mV | 79% |
| S-200-13.5 | 13.5V,0~14.9A | ± 2% | 100mV | 80% |
| S-200-15 | 15,0~14.3A | ± 2% | 100mV | 81% |
| S-200-24 | 24V,0~8.40A | ± 1% | 150mV | 83% |
| S-200-27 | 27V,0~7.5A | ± 1% | 150mV | 83% |
| S-200-48 | 48V,0~4.2A | ± 1% | 250mV | 84% |

S-201-12

201W Single Output Switching Power Supply

| Model No. | Ouput | Tol. | R & N | Effi. |
|---|---|---|---|---|
| S-201-5 | 5V,0~40.0A | ± 2% | 150mA | 73% |
| S-201-7.5 | 7.5V,0~26.5A | ± 2% | 150mA | 76% |
| S-201-12 | 12V,0~16.5A | ± 1% | 150mA | 79% |
| S-201-13.5 | 13.5V,0~14.7A | ± 1% | 150mA | 79% |
| S-201-15 | 15V,0~13.0A | ± 1% | 150mA | 80% |
| S-201-24 | 24V,0~8.3A | ± 1% | 150mA | 81% |
| S-201-27 | 27V,0~7.4A | ± 1% | 200mA | 82% |
| S-201-48 | 48V,0~4.2A | ± 1% | 240mA | 83% |

240W Single Output Switching Power Supply

| Model No. | Ouput | Tol. | R & N | PP |
|---|---|---|---|---|
| S-240-5 | 5V,0~40A | ± 2% | 150mA | 135 |
| S-240-7.5 | 7.5V,0~30.0A | ± 2% | 200mA | 135 |
| S-240-12 | 12V,0~18.0A | ± 1% | 150mA | 135 |
| S-240-15 | 15V,0~15.0A | ± 1% | 150mA | 135 |
| S-240-24 | 24V,0~10.0A | ± 1% | 180mA | 135 |
| S-240-30 | 30V,0~8.0A | ± 1% | 180mA | 135 |
| S-240-48 | 48V,0~5.0A | ± 1% | 200mA | 135 |

S-250-12

250W Single Output Switching Power Supply

| Model No. | Ouput | Tol. | R & N | Effi. |
|---|---|---|---|---|
| S-250-5 | 5V,0~40.0A | ± 2% | 80mA | 74% |
| S-250-12 | 12V,0~18A | ± 1% | 120mA | 79% |
| S-250-15 | 15V,0~15A | ± 1% | 120mA | 80% |
| S-250-24 | 24V,0~10.0A | ± 1% | 120mA | 81% |
| S-250-27 | 27V,0~9.4A | ± 1% | 150mA | 82% |
| S-250-48 | 48V,0~5.2A | ± 1% | 200mA | 82% |

300W Single Output Switching Power Supply

| Model No. | Ouput | Tol. | R & N | Effi. |
|---|---|---|---|---|
| S-300-5 | 5V,0~45.0A | ± 2% | 150mA | 73% |
| S-300-12 | 12V,0~25.0A | ± 1% | 200mA | 82% |
| S-300-13.5 | 13.5V,0~22.0A | ± 1% | 200mA | 82% |
| S-300-24 | 24V,0~12.5A | ± 1% | 200mA | 84% |
| S-300-27 | 27V,0~11.0A | ± 1% | 200mA | 84% |
| S-300-48 | 28V,0~6.5A | ± 1% | 240mA | 86% |

S-320-12

320W Single Output Switching Power Supply

| Model No. | Ouput | Tol. | R & N | Effi. |
|---|---|---|---|---|
| S-320-5 | 5V,0~50.0A | ± 2% | 150mA | 77% |
| S-320-7.5 | 7.5V,0~36.0A | ± 2% | 150mA | 80% |
| S-320-12 | 12V,0~25A | ± 1% | 150mA | 82% |
| S-320-13.5 | 13.5V,0~22.0A | ± 1% | 150mA | 83% |
| S-320-15 | 15V,0~20.0A | ± 1% | 150mA | 84% |
| S-320-24 | 24V,0~12.5A | ± 1% | 150mA | 86% |
| S-320-27 | 27V,0~11.0A | ± 1% | 200mA | 86% |
| S-320-48 | 48V,0~6.5A | ± 1% | 240mA | 87% |

320W PEC Single Output Switching Power Supply

| Model No. | Ouput | Tol. | R & N | Effi. |
|---|---|---|---|---|
| SP-320-5 | 5V,0~50.0A | ± 2% | 150mA | 79% |
| SP-320-7.5 | 7.5V,0~40.0A | ± 2% | 150mA | 83% |
| SP-320-12 | 12V,0~25.0A | ± 1% | 150mA | 86% |
| SP-320-13.5 | 13.5V,0~22.0A | ± 1% | 150mA | 86% |
| SP-320-15 | 15V,0~20.0A | ± 1% | 150mA | 86% |
| SP-320-24 | 24V,0~13.0A | ± 1% | 150mA | 87% |
| SP-320-27 | 27V,0~11.7A | ± 1% | 200mA | 88% |
| SP-320-48 | 48V,0~6.7A | ± 1% | 240mA | 89% |

S-350-12

350W PEC Single Output Switching Power Supply

| Model No. | Ouput | Tol. | R & N | Effi. |
|---|---|---|---|---|
| SP-350-5 | 5V,0~50A | ± 2% | 150mA | 73% |
| SP-350-7.5 | 7.5V,0~46.0A | ± 1% | 150mA | 76% |
| SP-350-12 | 12V,0~30.0A | ± 1% | 150mA | 79% |
| SP-350-13.5 | 13.5V,0~25.8A | ± 1% | 150mA | 79% |
| SP-350-15 | 15V,0~23.2A | ± 1% | 150mA | 80% |
| SP-350-24 | 24V,0~14.6A | ± 1% | 150mA | 81% |
| SP-350-27 | 27V,0~13.0A | ± 1% | 200mA | 82% |
| SP-350-48 | 48V,0~7.3A | ± 1% | 240mA | 83% |

350W Single Output Switching Power Supply

| Model No. | Ouput | Tol. | R & N | Effi. |
|---|---|---|---|---|
| S-350-5 | 5V,0~50A | ± 2% | 150mA | 73% |
| S-350-7.5 | 7.5V,0~46.0A | ± 1% | 150mA | 76% |
| S-350-12 | 12V,0~30.0A | ± 1% | 150mA | 79% |
| S-350-13.5 | 13.5V,0~25.8A | ± 1% | 150mA | 79% |
| S-350-15 | 15V,0~23.2A | ± 1% | 150mA | 80% |
| S-350-24 | 24V,0~14.6A | ± 1% | 150mA | 81% |
| S-350-27 | 27V,0~13.0A | ± 1% | 200mA | 82% |
| S-350-48 | 48V,0~7.3A | ± 1% | 240mA | 83% |

S-400-12

400W Single Output Switching Power Supply

| Model No. | Ouput | Tol. | R & N | Effi. |
|---|---|---|---|---|
| S-400-5 | 5V,0~55.0A | ± 2% | 80mA | 72% |
| S-400-9 | 9V,0~43.0A | ± 2% | 80mA | 76% |
| S-400-12 | 12V,0~33.0A | ± 1% | 120mA | 82% |
| S-400-15 | 15V,0~26.0A | ± 1% | 150mA | 84% |
| S-400-24 | 24V,0~17.0A | ± 1% | 150mA | 86% |
| S-400-48 | 48V,0~8.3A | ± 1% | 240mA | 88% |

- High efficiency and high reliability
- Protections:Short circuit/Over load
- Air cooling
- 2 years warranty


MS-15-12

| Model NO. | MS-15-5 | MS-15-12 | MS-15-15 | MS-15-24 | MS-15-48 |
|---|---|---|---|---|---|
| DC voltage | 5V | 12V | 15V | 24V | 48V |
| Voltage tolerance | ±2% | ±1% | ±1% | ±1% | ±1% |
| Rated current | 3A | 1.25A | 1A | 0.7A | 0.32A |
| Current range | 0~3A | 0~1.25A | 0~1.0A | 0~0.7A | 0~0.32A |
| Rated power | 15W | 15W | 15W | 16.8W | 15.36W |
| Ripple&noise | 50mVP-P | 50mVP-P | 100mVP-P | 100mVP-P | 120mVP-P |
| DC voltage adj.range | ±10% | ±10% | ±10% | ±10% | ±10% |
| Setup,rise time | 200ms, 100ms, 20ms at full load | | | | |
| Voltage adj.range | 170~265VAC auto switch 254~375VDC 47~63Hz | | | | |
| AC current | 0.25A/230VAC | | | | |
| Efficiency | 74% | 80% | 81% | 83% | 83% |
| Inrush current | 30A/230VAC | | | | |
| Leakage current | <0.5mA/240VAC | | | | |
| Over load | ±110%~±150% | | | | |
| Working temp. Humidity | (-10°C~+60°C):20%~90%RH | | | | |
| Protect temp. Humidity | (-20°C~+85°C):10%~95%RH | | | | |
| Aseismicity | 10~500Hz.2G 10min./1 cycle.60min.each along X.Y.Z axes | | | | |
| Withstand voltage | I/P-FG:1.5KVAC O/P-FG:0. 5KVAC | | | | |
| Isolation resistance | I/P-O/P, I/P-FG, O/P-FG:100m 0hms/500VDC | | | | |
| Safety standards | Compliance to UL 1012 | | | | |
| Emc standards | Compliance to EN55022 CLASSA | | | | |
| Weight | 0. 2Kg | | | | |
| Dimension | 120×50×31mm(L×W×H) | | | | |


MS-35-12

| Model NO. | MS-35-5 | MS-35-12 | MS-35-15 | MS-35-24 | MS-35-48 |
|---|---|---|---|---|---|
| DC voltage | 5V | 12V | 15V | 24V | 48V |
| Voltage tolerance | ±1% | ±1% | ±1% | ±1% | ±1% |
| Rated current | 7.0A | 3.0A | 2.4A | 1.5A | 0.8A |
| Current range | 0~7A | 0~3.0A | 0~2.4A | 0~1.5A | 0~0.8A |
| Rated power | 36W | 36W | 36W | 36W | 38.4W |
| Ripple&noise | 75mVP-P | 100mVP-P | 100mVP-P | 100mVP-P | 150mVP-P |
| DC voltage adj.range | ±10% | ±10% | ±10% | ±10% | ±10% |
| Setup,rise time | 200ms, 100ms, 20ms at full load | | | | |
| Voltage adj.range | 170VAC~265VAC auto switch 254~375VDC | | | | |
| AC current | 0. 65A/230VAC | | | | |
| Efficiency | 74% | 81% | 81% | 83% | 83% |
| Inrush current | cold start 36A 230VAC | | | | |
| Leakage current | <0. 6mA/240VAC | | | | |
| Over load | ±110%~±150% | | | | |
| Working temp. Humidity | (-10℃~+60℃):20%~90%RH | | | | |
| Protect temp. Humidity | (-20℃~+85℃):10%~95%RH | | | | |
| Aseismicity | 10~500Hz.2G 10min./1 cycle.60min.each along X.Y.Z axes | | | | |
| Withstand voltage | I/P-FG:1.5KVAC O/P-FG:0. 5KVAC | | | | |
| Isolation resistance | I/P-O/P, I/P-FG, O/P-FG:100m 0hms/500VDC | | | | |
| Safety standards | Compliance to UL 1012 | | | | |
| Emc standards | Compliance to EN55022 CLASSA | | | | |
| Weight | 0. 2Kg | | | | |
| Dimension | 85×58×38mm(L×W×H) | | | | |

NOTE

1. All parameters NOT specially mentioned are measured at 230VAC input,rated load and 25°C of ambient temperature.
2. Ripple&noise are measured at 20MHz of bandwidth by using a 12″twisted pair-wire terminated with a 0.1uf&47uf parallel capacitor.
3. Tolerance:includes set up tolerance, line regulation and load regulation.

ANDELI

# Power Supply

- High efficiency and high reliability
- Protections:Short circuit/Over load
- Air cooling
- 2 years warranty

MS-50-12

| Model NO. | MS-50-5 | MS-50-12 | MS-50-15 | MS-50-24 | MS-50-48 |
|---|---|---|---|---|---|
| DC voltage | 5V | 12V | 15V | 24V | 48V |
| Voltage tolerance | ±2% | ±1% | ±1% | ±1% | ±1% |
| Rated current | 10A | 4.2A | 3.4A | 2.1A | 0.8A |
| Current range | 0~10A | 0~4.2A | 0~3.4A | 0~2.1A | 0~1A |
| Rated power | 50W | 50.4W | 51W | 50.4W | 50.4W |
| Ripple&noise | 75mVP-P | 100mVP-P | 120mVP-P | 120mVP-P | 150mVP-P |
| DC voltage adj.range | ±10% | ±10% | ±10% | ±10% | ±10% |
| Setup,rise time | 200ms, 100ms, 20ms at full load | | | | |
| Voltage adj.range | 170~265VAC auto switch 254~375VDC 47~63Hz | | | | |
| AC current | 0.65A/230VAC | | | | |
| Efficiency | 74% | 81% | 81% | 83% | 83% |
| Inrush current | 36A/230VAC | | | | |
| Leakage current | <0.5mA/240VAC | | | | |
| Over load | ±110%~±150% | | | | |
| Working temp. Humidity | (-10℃~+60℃):20%~90%RH | | | | |
| Protect temp. Humidity | (-20℃~+85℃):10%~95%RH | | | | |
| Aseismicity | 10~500Hz.2G 10min./1 cycle.60min.each along X.Y.Z axes | | | | |
| Withstand voltage | I/P-FG:1.5KVAC O/P-FG:0. 5KVAC | | | | |
| Isolation resistance | I/P-O/P, I/P-FG, O/P-FG:100m 0hms/500VDC | | | | |
| Safety standards | Compliance to UL 1012 | | | | |
| Emc standards | Compliance to EN55022 CLASSA | | | | |
| Weight | 0. 33Kg | | | | |
| Dimension | 99×97×36mm(L×W×H) | | | | |

MS-60-12

| Model NO. | MS-60-5 | MS-60-12 | MS-60-15 | MS-60-24 | MS-60-48 |
|---|---|---|---|---|---|
| DC voltage | 5V | 12V | 15V | 24V | 48V |
| Voltage tolerance | ±2% | ±1% | ±1% | ±1% | ±1% |
| Rated current | 12A | 5A | 4A | 2.5A | 1.25A |
| Current range | 0~12A | 0~5A | 0~4A | 0~2.5A | 0~1.25A |
| Rated power | 50W | 50.4W | 51W | 50.4W | 50.4W |
| Ripple&noise | 100mVP-P | 120mVP-P | 120mVP-P | 150mVP-P | 150mVP-P |
| DC voltage adj.range | ±10% | ±10% | ±10% | ±10% | ±10% |
| Setup,rise time | 200ms, 100ms, 20ms at full load | | | | |
| Voltage adj.range | 170~265VAC auto switch 254~375VDC 47~63Hz | | | | |
| AC current | 0.65A/230VAC | | | | |
| Efficiency | 74% | 81% | 81% | 83% | 83% |
| Inrush current | 36A/230VAC | | | | |
| Leakage current | <0.5mA/240VAC | | | | |
| Over load | ±110%~±150% | | | | |
| Working temp. Humidity | (-10℃~+60℃):20%~90%RH | | | | |
| Protect temp. Humidity | (-20℃~+85℃):10%~95%RH | | | | |
| Aseismicity | 10~500Hz.2G 10min./1 cycle.60min.each along X.Y.Z axes | | | | |
| Withstand voltage | I/P-FG:1.5KVAC O/P-FG:0. 5KVAC | | | | |
| Isolation resistance | I/P-O/P, I/P-FG, O/P-FG:100m 0hms/500VDC | | | | |
| Safety standards | Compliance to UL 1012 | | | | |
| Emc standards | Compliance to EN55022 CLASSA | | | | |
| Weight | 0. 33Kg | | | | |
| Dimension | 99×97×36mm(L×W×H) | | | | |

NOTE

1. All parameters NOT specially mentioned are measured at 230VAC input,rated load and 25℃ of ambient temperature.
2. Ripple&noise are measured at 20MHz of bandwidth by using a 12″twisted pair-wire terminated with a 0.1uf&47uf parallel capacitor.
3. Tolerance:includes set up tolerance, line regulation and load regulation.

- High efficiency and high reliability
- Protections:Short circuit/Over load
- Air cooling
- 2 years warranty

RS-60-12

| Model NO. | RS-60-5 | RS-60-12 | RS-60-15 | RS-60-24 | RS-60-48 |
|---|---|---|---|---|---|
| DC voltage | 5V | 12V | 15V | 24V | 48V |
| Voltage tolerance | 4.5~5.6V | 10~13.2V | 13.5~18V | 20~26.4V | 41~56V |
| Rated current | 12A | 5A | 4A | 2.5A | 1.25A |
| Current range | 0~12A | 0~5A | 0~4A | 0~2.5A | 0~1.25A |
| Rated power | 60W | 60W | 60W | 60W | 60W |
| Ripple&noise | 75mVP-P | 100mVP-P | 100mVP-P | 100mVp-p | 120mVp-p |
| DC voltage adj.range | ±10% | ±10% | ±10% | ±10% | ±10% |
| Setup,rise time | 200ms, 100ms, 30ms at full load | | | | |
| Voltage adj.range | 110~265VAC auto switch 254~375VDC 47~63Hz | | | | |
| AC current | 0.8A/110VAC 0.45A/230VAC | | | | |
| Efficiency | 74% | 80% | 81% | 83% | 83% |
| Inrush current | 45A/165VAC 45A/230VAC | | | | |
| Leakage current | <3.5mA/240VAC | | | | |
| Over load | ±110%~±150% | | | | |
| Working temp. Humidity | (-10℃~+60℃):20%~90%RH | | | | |
| Protect temp. Humidity | (-20℃~+85℃):10%~95%RH | | | | |
| Aseismicity | 10~500Hz.2G 10min./1 cycle.60min.each along X.Y.Z axes | | | | |
| Withstand voltage | I/P-FG:1.5KVAC O/P-FG:0. 5KVAC | | | | |
| Isolation resistance | I/P-O/P, I/P-FG, O/P-FG:100m 0hms/500VDC | | | | |
| Safety standards | Compliance to UL 1012 | | | | |
| Emc standards | Compliance to EN55022 CLASSA | | | | |
| Weight | 0. 57Kg | | | | |
| Dimension | 129×98×38mm(L×W×H) | | | | |

RS-100-12

| Model NO. | RS-100-5 | RS-100-12 | RS-100-15 | RS-100-24 | RS-100-48 |
|---|---|---|---|---|---|
| DC voltage | 5V | 12V | 15V | 24V | 48V |
| Voltage tolerance | 4.5~5.6V | 10~13.2V | 13.5~18V | 20~26.4V | 41~56V |
| Rated current | 20A | 8.3A | 6.7A | 4.2A | 2.1A |
| Current range | 0~20A | 0~8.3A | 0~6.7A | 0~4.2A | 0~2.1A |
| Rated power | 100W | 100W | 100W | 100W | 100W |
| Ripple&noise | 100mVP-P | 120mVP-P | 120mVP-P | 150mVP-P | 240mVP-P |
| DC voltage adj.range | ±10% | ±10% | ±10% | ±10% | ±10% |
| Setup,rise time | 200ms, 100ms, 30ms at full load | | | | |
| Voltage adj.range | 110~265VAC auto switch 254~375VDC 47~63Hz | | | | |
| AC current | 2A/110VAC 1A/230VAC | | | | |
| Efficiency | 74% | 80% | 81% | 83% | 83% |
| Inrush current | 45A/165VAC 45A/230VAC | | | | |
| Leakage current | <3.5mA/240VAC | | | | |
| Over load | ±110%~±150% | | | | |
| Working temp. Humidity | (-10℃~+60℃):20%~90%RH | | | | |
| Protect temp. Humidity | (-20℃~+85℃):10%~95%RH | | | | |
| Aseismicity | 10~500Hz.2G 10min./1 cycle.60min.each along X.Y.Z axes | | | | |
| Withstand voltage | I/P-FG:1.5KVAC O/P-FG:0. 5KVC | | | | |
| Isolation resistance | I/P-O/P, I/P-FG, O/P-FG:100m 0hms/500VDAC | | | | |
| Safety standards | Compliance to UL 1012 | | | | |
| Emc standards | Compliance to EN55022 CLASSA | | | | |
| Weight | 0. 57Kg | | | | |
| Dimension | 159×97×38mm(L×W×H) | | | | |

NOTE

1. All parameters NOT specially mentioned are measured at 230VAC input,rated load and 25℃ of ambient temperature.
2. Ripple&noise are measured at 20MHz of bandwidth by using a 12″twisted pair-wire terminated with a 0.1uf&47uf parallel capacitor.
3. Tolerance:includes set up tolerance, line regulation and load regulation.

- High efficiency and high reliability
- Protections:Short circuit/Over load
- Air cooling
- 2 years warranty

RS-120-12

| Model NO. | RS-120-5 | RS-120-12 | RS-120-15 | RS-120-24 | RS-120-48 |
|---|---|---|---|---|---|
| DC voltage | 5V | 12V | 15V | 24V | 48V |
| Voltage tolerance | 4.5~5.6V | 10~13.2V | 13.5~18V | 20~26.4V | 41~56V |
| Rated current | 20A | 10A | 8A | 5A | 3.2A |
| Current range | 0~20A | 0~10A | 0~8A | 0~5A | 0~2.5A |
| Rated power | 100W | 100W | 100W | 100W | 120W |
| Ripple&noise | 100mVP-P | 120mVP-P | 120mVP-P | 150mVP-P | 240mVP-P |
| DC voltage adj.range | ±10% | ±10% | ±10% | ±10% | ±10% |
| Setup,rise time | 200ms, 100ms at full load | | | | |
| Voltage adj.range | 110~265VAC auto switch 254~375VDC 47~63Hz | | | | |
| AC current | 2A/110VAC 1A/230VAC | | | | |
| Efficiency | 74% | 80% | 81% | 83% | 83% |
| Inrush current | 45A/110VAC 45A/230VAC | | | | |
| Leakage current | <3.5mA/240VAC | | | | |
| Over load | ±110%~±150% | | | | |
| Working temp. Humidity | (-10℃~+60℃):20%~90%RH | | | | |
| Protect temp. Humidity | (-20℃~+85℃):10%~95%RH | | | | |
| Aseismicity | 10~500Hz.2G 10min./1 cycle.60min.each along X.Y.Z axes | | | | |
| Withstand voltage | I/P-FG:1.5KVAC O/P-FG:0. 5KVAC | | | | |
| Isolation resistance | I/P-O/P, I/P-FG, O/P-FG:100m 0hms/500VDC | | | | |
| Safety standards | Compliance to UL 1012 | | | | |
| Emc standards | Compliance to EN55022 CLASSA | | | | |
| Weight | 0. 6Kg | | | | |
| Dimension | 199×98×38mm(L×W×H) | | | | |

RS-150-12

| Model NO. | RS-150-5 | RS-150-12 | RS-150-15 | RS-150-24 | RS-150-48 |
|---|---|---|---|---|---|
| DC voltage | 5V | 12V | 15V | 24V | 48V |
| Voltage tolerance | 4.5~5.6V | 10~13.2V | 13.5~18V | 20~26.4V | 41~56V |
| Rated current | 25A | 12.5A | 10A | 6.25A | 3.2A |
| Current range | 0~25A | 0~12.5A | 0~10A | 0~6.25A | 0~3.2A |
| Rated power | 125W | 150W | 150W | 150W | 153.6W |
| Ripple&noise | 120mVP-P | 150mVP-P | 150mVP-P | 150mVP-P | 240mVP-P |
| DC voltage adj.range | ±10% | ±10% | ±10% | ±10% | ±10% |
| Setup,rise time | 200ms, 100ms, 30ms at full load | | | | |
| Voltage adj.range | 110~265VAC auto switch 254~375VDC 47~63Hz | | | | |
| AC current | 3A/110VAC 1.6A/230VAC | | | | |
| Efficiency | 74% | 80% | 81% | 83% | 83% |
| Inrush current | 45A/165VAC 45A/230VAC | | | | |
| Leakage current | <3.5mA/240VAC | | | | |
| Over load | ±110%~±150% | | | | |
| Working temp. Humidity | (-10℃~+60℃):20%~90%RH | | | | |
| Protect temp. Humidity | (-20℃~+85℃):10%~95%RH | | | | |
| Aseismicity | 10~500Hz.2G 10min./1 cycle.60min.each along X.Y.Z axes | | | | |
| Withstand voltage | I/P-FG:1.5KVAC O/P-FG:0. 5KVAC | | | | |
| Isolation resistance | I/P-O/P, I/P-FG, O/P-FG:100m 0hms/500VDC | | | | |
| Safety standards | Compliance to UL 1012 | | | | |
| Emc standards | Compliance to EN55022 CLASSA | | | | |
| Weight | 0. 6Kg | | | | |
| Dimension | 199×98×38mm(L×W×H) | | | | |

NOTE

1. All parameters NOT specially mentioned are measured at 230VAC input,rated load and 25℃ of ambient temperature.
2. Ripple&noise are measured at 20MHz of bandwidth by using a 12″twisted pair-wire terminated with a 0.1uf&47uf parallel capacitor.
3. Tolerance:includes set up tolerance, line regulation and load regulation.

ANDELI

# Power Supply

RS-200-12

- High efficiency and high reliability
- Protections:Short circuit/Over load
- Air cooling
- 2 years warranty

| Model NO. | RS-200-5 | RS-200-12 | RS-200-15 | RS-200-24 | RS-200-48 |
|---|---|---|---|---|---|
| DC voltage | 5V | 12V | 15V | 24V | 48V |
| Voltage tolerance | 4.5~5.6V | 10~13.2V | 13.5~18V | 20~26.4V | 41~56V |
| Rated current | 35A | 16.5A | 13A | 8.3A | 4.2A |
| Current range | 0~35A | 0~16.5A | 0~13A | 0~8.3A | 0~4.2A |
| Rated power | 200W | 198W | 198W | 199.2W | 201.6W |
| Ripple&noise | 120mVP-P | 150mVP-P | 150mVP-P | 150mVP-P | 240mVP-P |
| DC voltage adj.range | ±10% | ±10% | ±10% | ±10% | ±10% |
| Setup,rise time | 200ms, 100ms at full load | | | | |
| Voltage adj.range | 165~265VAC auto switch 254~375VDC 47~63Hz | | | | |
| AC current | 3A/165VAC 2A/230VAC | | | | |
| Efficiency | 74% | 80% | 81% | 83% | 83% |
| Inrush current | 45A/165VAC 45A/230VAC | | | | |
| Leakage current | <3.5mA/240VAC | | | | |
| Over load | ±110%~±150% | | | | |
| Working temp. Humidity | (-10℃~+60℃):20%~90%RH | | | | |
| Protect temp. Humidity | (-20℃~+85℃):10%~95%RH | | | | |
| Aseismicity | 10~500Hz.2G 10min./1 cycle.60min.each along X.Y.Z axes | | | | |
| Withstand voltage | I/P-FG:1.5KVAC O/P-FG:0. 5KVC | | | | |
| Isolation resistance | I/P-O/P, I/P-FG, O/P-FG:100m 0hms/500VDAC | | | | |
| Safety standards | Compliance to UL 1012 | | | | |
| Emc standards | Compliance to EN55022 CLASSA | | | | |
| Weight | 0. 5Kg | | | | |
| Dimension | 165×99×45mm(L×W×H) | | | | |

NOTE

1. All parameters NOT specially mentioned are measured at 230VAC input,rated load and 25℃ of ambient temperature.
2. Ripple&noise are measured at 20MHz of bandwidth by using a 12″twisted pair-wire terminated with a 0.1uf&47uf parallel capacitor.
3. Tolerance:includes set up tolerance, line regulation and load regulation.

LV-30-12

Single Output LED Switching Power Supply(Size:167×28.5×21mm)

| Model NO. | Housing material | AC input voltage range | Max.output power | Output voltage | Output current | Working temperature | Weight | Connect the line request |
|---|---|---|---|---|---|---|---|---|
| LV-15-12 | Aluminum | 110-250V AC | 15W | 12V±0.5V | 1. 25A | -20℃ ~40℃ | 170g | The wire of VDE (200mm) |
| LV-15-24 | | 110-250V AC | 15W | 24V±0.5V | 0. 625A | | 170g | |
| LV-18-12 | | 110-250V AC | 18W | 12V±0.5V | 1. 5A | | 170g | |
| LV-18-24 | | 110-250V AC | 18W | 24V±0.5V | 0. 75A | | 170g | |

Single Output LED Switching Power Supply(Size:200×30.5×20. 5mm)

| Model NO. | Housing material | AC input voltage range | Max.output power | Output voltage | Output current | Working temperature | Weight | Connect the line request |
|---|---|---|---|---|---|---|---|---|
| LV-30-12 | Aluminum | 170-250V AC | 30W | 12V±0.5V | 2. 5A | -20℃ ~40℃ | 250g | The wire of VDE (200mm) |
| LV-30-24 | | 170-250V AC | 30W | 24V±0.5V | 1. 25A | | 250g | |
| LV-36-12 | | 170-250V AC | 36W | 12V±0.5V | 3A | | 250g | |
| LV-36-24 | | 170-250V AC | 36W | 24V±0.5V | 1. 5A | | 250g | |

LV-60-12

Single Output LED Switching Power Supply (Size: 178×70×50mm)

| Model NO. | Housing material | AC input voltage range | Max.output power | Output voltage | Output current | Working temperature | Weight | Connect the line request |
|---|---|---|---|---|---|---|---|---|
| LV-60-12 | Aluminum | 90-130V AC | 60W | 12V ± 0.5V | 5A | −20℃ ~40℃ | 850g | The wire of VDE (200mm) |
| LV-60-24 | | 90-130V AC | 60W | 24V ± 0.5V | 2. 5A | | 850g | |
| LV-60-12 | | 170-250V AC | 60W | 12V ± 0.5V | 5A | | 850g | |
| LV-60-24 | | 170-250V AC | 60W | 24V ± 0.5V | 2. 5A | | 850g | |

Single Output LED Switching Power Supply (Size: 178×70×50mm)

| Model NO. | Housing material | AC input voltage range | Max.output power | Output voltage | Output current | Working temperature | Weight | Connect the line request |
|---|---|---|---|---|---|---|---|---|
| LV-100-12 | Aluminum | 90-130V AC | 100W | 12V ± 0.5V | 8. 33A | −20℃ ~40℃ | 1200g | The wire of VDE (200mm) |
| LV-100-24 | | 90-130V AC | 100W | 24V ± 0.5V | 4. 17A | | 1200g | |
| LV-100-12 | | 170-250V AC | 100W | 12V ± 0.5V | 8. 33A | | 1200g | |
| LV-100-24 | | 170-250V AC | 100W | 24V ± 0.5V | 4. 17A | | 1200g | |

Single Output LED Switching Power Supply (Size: 228×120×63mm)

| Model NO. | Housing material | AC input voltage range | Max.output power | Output voltage | Output current | Working temperature | Weight | Connect the line request |
|---|---|---|---|---|---|---|---|---|
| LV-150-12 | Aluminum | 170-250V AC | 150W | 12V ± 0.5V | 12. 5A | −20℃ ~40℃ | 2500g | The wire of VDE (200mm) |
| LV-150-24 | | 170-250V AC | 150W | 24V ± 0.5V | 6. 25A | | 2500g | |
| LV-200-12 | | 170-250V AC | 200W | 12V ± 0.5V | 16. 7A | | 2500g | |
| LV-200-24 | | 170-250V AC | 200W | 24V ± 0.5V | 8. 33A | | 2500g | |

BK-50VA

# BK Machine Tool Control Transformer

## 1. Application

BK series machine tool control transformer is suitable for circuit of 50~60Hz, voltage up to 500V, usually applied as power supply for machine tool electrical appliances, local lightings and indicator lamps.

## 2. Structure character

According to different structures, BK transformer belongs to shell type, and according to the installation mode, it belongs to vertical type.

BK-300VA

## 3. Type and Meaning

B K - □

- □ — Rated capacity
- K — Control
- B — Transformer

## 4. Working environment

1. Ambient air temperature: -5°C ~ +40°C, the highest monthly mean temperature should not exceed +30°C;
2. Altitude for installing place should not exceed 1000m;
3. When the ambient air temperature is +40, the relative humidity should not exceed 50%, and it allows higher relative humidity under lower temperature. Max average humidity in the dampest month is 90%, meanwhile the lowest average temperature of this month is +25°C, and condensation on the product surface caused by temperature change should be taken into consideration.

BK-500VA

BK-1000VA

## 5. Outline and Installation Dimension

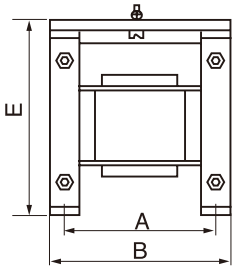


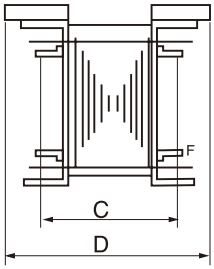



F direction view

| Type | Outline dimension (mm) | Mounting size (mm) | Primary voltage | Secondary voltage | QTY/CTN |
|---|---|---|---|---|---|
| BK-25VA | 76 × 80 × 75 | 63 × 44 | 220V 380V | 380V,220V, 110V,36V, 24V,12V,6V (to be chosen) | 16 |
| BK-50VA | 85 × 90 × 80 | 71 × 61 | | | 16 |
| BK-100VA | 103 × 92 × 95 | 87 × 69 | | | 12 |
| BK-150VA | 103 × 100 × 95 | 87 × 76 | | | 8 |
| BK-200VA | 103 × 106 × 95 | 87 × 81 | | | 8 |
| BK-250VA | 115 × 110 × 130 | 95 × 84 | | | 6 |
| BK-300VA | 115 × 115 × 130 | 95 × 86 | | | 6 |
| BK-400VA | 134 × 132 × 150 | 107 × 93 | | | 4 |
| BK-500VA | 134 × 137 × 150 | 107 × 98 | | | 4 |
| BK-1000VA | 153 × 149 × 168 | 128 × 115 | | | 2 |
| BK-1500VA | 175 × 185 × 185 | 140 × 135 | | | 1 |
| BK-2000VA | 175 × 195 × 185 | 140 × 145 | | | 1 |
| BK-2500VA | 207 × 250 × 230 | 168 × 163 | | | 1 |
| BK-3000VA | 207 × 250 × 230 | 168 × 173 | | | 1 |
| BK-4000VA | 240 × 240 × 250 | 200 × 160 | | | 1 |
| BK-5000VA | 240 × 250 × 250 | 200 × 170 | | | 1 |

# JBK3 Machine Tool Control Transformer

## 1. Application

JBK3-63VA

JBK3 series machine tool control transformer is kind of new product, it accords with standards like VDE0550, IEC204-1, IEC439,GB5226, etc. It is suitable for AC50/60Hz, output rated voltage lower than 220V,input rated voltage lower than 500V, worked as control power supply for mechanical equipment and general electrical appliance and as power supply for work lighting and signal lamp.

## 2. Type and Meaning

JBK3-160VA

JB K 3 - □

- Rated capacity
- Design No.
- Control
- Machine tool transformer

## 3.Technical Parameter

JBK3-250VA

JBK3-1000VA

| Type | Rated capacity (VA) | Ue rated input voltage (V) | Rated output voltage | | |
|---|---|---|---|---|---|
| | | | Control | Illumination | Indication |
| JBK3-40VA | 40 | 220±5%<br>380±5% | 110<br>(127) | 24<br>(36) | 6<br>(12) |
| JBK3-63VA | 63 | | | | |
| JBK3-100VA | 100 | | | | |
| JBK3-160VA | 160 | | | | |
| JBK3-250VA | 250 | | | | |
| JBK3-400VA | 400 | | | | |
| JBK3-630VA | 630 | | | | |
| JBK3-1000VA | 1000 | | Distribution of capacity for different winding may be according to the user's request. | | |
| JBK3-1600VA | 1600 | | | | |
| JBK3-2500VA | 2500 | | | | |

## 4. Outline and Installation Dimension

| Type | Outline Dimension (mm) | | | Hole dimension for installation (mm) | | Installation hole K or K x J(mm) | Fmax (mm) |
|---|---|---|---|---|---|---|---|
| | Bmax | Dmax | Emax | A | C | | |
| JBK3-40,60VA | 78 | 72 | 89 | 56±0.4 | 51±2 | 4.8 × 9 | 12 |
| JBK3-100VA | 85 | 85 | 94 | 64±0.4 | 66±2 | 4.8 × 9 | 12 |
| JBK3-160VA | 96 | 91 | 109 | 84±0.4 | 73±2 | 5.8 × 11 | 14 |
| JBK3-250VA | 96 | 105 | 109 | 84±0.4 | 87±2 | 5.8 × 11 | 14 |
| JBK3-400VA | 120 | 109 | 123 | 90±0.4 | 90±2 | 7 × 12 | 18 |
| JBK3-630VA | 150 | 112 | 150 | 122±0.5 | 90±2 | 7 × 12 | 22 |
| JBK3-1000VA | 160 | 195 | 151 | 126±2 | 152±2 | 7 × 12 | 18 |
| JBK3-1600VA | 184 | 220 | 163 | 140±2 | 176±2 | 7 × 12 | 18 |
| JBK3-2500VA | 200 | 250 | 171 | 172±2 | 200±2 | 7 × 12 | 18 |

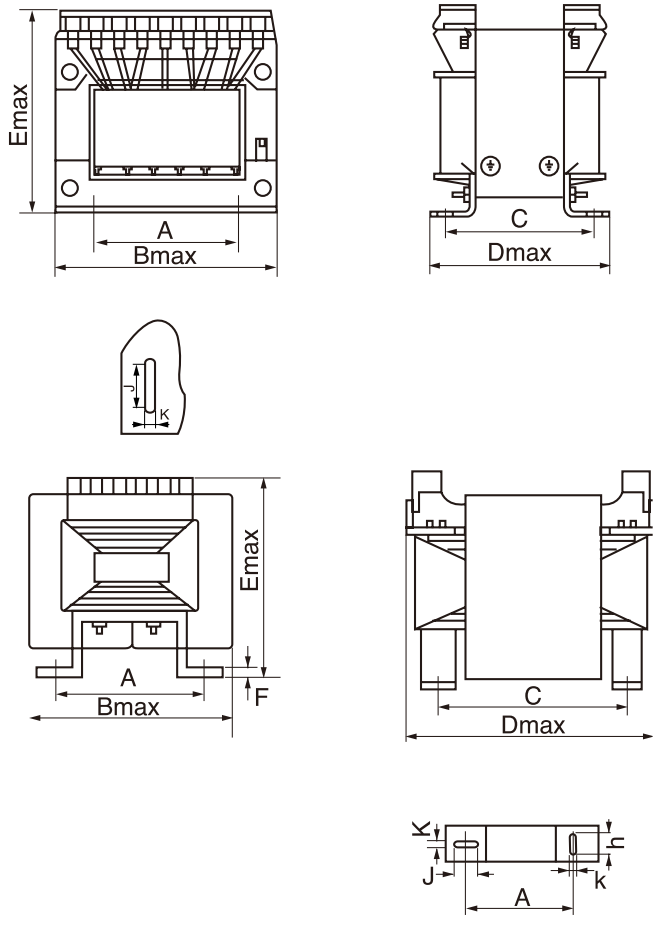

# TDGC2 TSGC2 TDGC2J Voltage Regulator

TDGC2J-1.5KVA

TDGC2-5KVA

TSGC2-15KVA

## 1. Application

The product is special auto transformer which is connected in different forms.Its output voltage can be regulated smoothly and continuously from zero to the maximum value.The provision of an indicating meter is made for the models TDGC2 TDGC2J 0.2,0.25,0.5/0.5(M).All the models find popular applications in industries,agriculture and scientific researches,and are particularly suited to serves as ancillary facilities for such equipment as various machine tools,transistor curve tracers, projecting TV sets,and analytical instruments in petroleum industry,etc.

## 2. Specification

| Type | Capacity (kVA) | Phase | Frequency (Hz) | Input voltage (V) | Output voltage (V) | Max. output current(A) |
|---|---|---|---|---|---|---|
| TDGC2J TDGC2 TDGC-0.5(C) | 0.5 | 1 | 50/60 | 110/220 | 0-250 | 0.88/2 |
| TDGC2J TDGC2 TDGC-1/0.5 | 1 | | | | | 1.6/4 |
| TDGC2J TDGC2 TDGC-2 | 2 | | | | | 3.2/8 |
| TDGC2J TDGC2 TDGC-3/0.5 | 3 | | | | | 4.8/12 |
| TDGC2J TDGC2 TDGC-5/0.5 | 5 | | | | | 8/12 |
| TDGC2J TDGC2 TDGC-10/0.5 | 10 | | | | | 16/40 |
| TDGC2J TDGC2 TDGC-15/0.5 | 15 | | | | | 24/60 |
| TDGC2J TDGC2 TDGC-20/0.5 | 20 | | | | | 80 |
| TSGC2J TSGC2 TSGC-3/0.5 | 3 | 3 | 50/60 | 220/380 | 0-430 | 1.6/4 |
| TSGC2J TSGC2 TSGC-6/0.5 | 6 | | | | | 3.2/8 |
| TSGC2J TSGC2 TSGC-10/0.5 | 10 | | | | | 5.4/13.4 |
| TSGC2J TSGC2 TSGC-15/0.5 | 15 | | | | | 20 |
| TSGC2J TSGC2 TSGC-20/0.5 | 20 | | | | | 28 |
| TSGC2J TSGC2 TSGC-30/0.5 | 30 | | | | | 40 |

# Uninterruptable Power Supply(UPS)

UPS-500VA

UPS-1000VA

## 1. Application

Back-up UPS is a technically-modified new product of the company on the basis of the previous UPS-500VA one and has multifunction as automatic voltage regulation of local electricity, sychronous switches for users load,protections of over-voltage,overvoltage,overcurrent,overcharge of batterise,feed and so on.

## 2. Specification

| Input voltage / Output voltage | 220V±20% / 220V±10% |
|---|---|
| Frequency | 50Hz/60Hz |
| Efficiency | more than 80% |
| Ambient temprature | -10˚C~+40˚C |
| Charger time | 8 hours/time |
| Inverter supply time | (Rating power 80%) 3-4mins (rating power 50%)8-10mins |
| Inverter charge time | <10ms |
| Output waveform | Square wave |
| Yawp | <50dB |

## 3. Outline & Packing

| Type | Time | Outline(cm) | | | Weight(kg) |
|---|---|---|---|---|---|
| | | L | W | H | |
| UPS-350VA | 3-7min | 26 | 10 | 14 | 4.3 |
| UPS-500VA | 5-15min | 36 | 11 | 16 | 7.2 |
| UPS-1000VA | 5-15min | 36 | 15 | 23 | 11.5 |

# Technical Specification

| Product Series | | High Frequency On Line UPS (1~3kVA) | | | | | |
|---|---|---|---|---|---|---|---|
| Model | | G1K | G2K | G3K | G1KS | G2KS | G3KS |
| Capacity | VA/W | 1kVA/0.7kW | 2kVA/1.4kW | 3kVA/2.1kW | 1kVA/0.7kW | 2kVA/1.4kW | 3kVA/2.1kW |
| Input | Nominal Voltage | 110/115/120VAC or 220/230/240VAC | | | | | |
| | Voltage Range | 180~300VAC | | | | | |
| | Frequency Range | 50Hz: 46~54Hz; 60Hz: 56~64Hz | | | | | |
| | Phase | Single phase | | | | | |
| | Power Factor | > 0.98 | | | | | |
| | Connection | IEC320-10A inlet | IEC320-10A inlet | IEC320-16A inlet | IEC320-10A inlet | IEC320-10A inlet | IEC320-16A inlet |
| Output | Voltage | 110/115/120 x (1 ± 2%)VAC or 220/230/240 x (1 ± 2%)VAC | | | | | |
| | Frequency | Synchronization range (line mode); 50 or 60 x (1 ± 0.2%)Hz (Battery mode) | | | | | |
| | Phase | Single phase | | | | | |
| | Wave Form | Sine Wave | | | | | |
| | Power Factor | 0.7 or 0.8 optional | | | | | |
| | Voltage Distortion | 3% | | | | | |
| | Overload Capability | 110%~150% for 30 sec., ≥150% for 200 ms | | | | | |
| | Current Crest Ratio | 3:1 | | | | | |
| | Connections | IEC320 *4 | IEC320 *6 | IEC320*3 & terminal block | IEC320 *4 | IEC320 *6 | IEC320*3 & terminal block |
| Battery | Type | Sealed, Maintenance free, Lead-acid | | | | | |
| | Nominal DC Voltage | | | | 36VDC | 96VDC | 96VDC |
| | Quantity | 3 pieces | 8 pieces | 8 pieces | Depends on the requested back-up time | | |
| | Back-up Time(full load) | 5 min | 9 min | 5 min | Depends on the capacity of the external battery bank | | |
| | Recharge Time | 5 hrs to 90% of capacity | | | Depends on the capacity of the external battery bank | | |
| Bypass | Automatic Transfer | On overload and UPS failure | | | | | |
| | Before UPS Power-on | Default "ON" user adjustable to "YES" | | | | | |
| | Voltage Range | 40~132VAC (Default), user adjustable within 40~143VAC or 80~264VAC (Default), user adjustable within 80~286VAC | | | | | |
| Transfer Time | AC to DC Zero | Inverter to Bypass 4ms(Typical) | | | | | |
| Indicators | LED display | Load level / Battery level, Battery, Utility power, Inverter, Bypass, Overload, Fault | | | | | |
| Audible Alarm | | Bypass, On battery mode, Battery low, Overload, Fault | | | | | |
| Acoustic noise | At 1 meter distance | <45 dB | <50 dB | <50 dB | <45 dB | <50 dB | <50 dB |
| Communications | DB-9 Port | RS-232 serial interface | | | | | |
| | Intelligent Slot | Options: SMNP Card, AS400 Card or Winpower CMC / (USB Port) | | | | | |
| Environmental | Operating Temperature | 0~40°C | | | | | |
| | Operating Humidity | 20~90% non-condensing | | | | | |
| Physical Feature | Weight(Kg) | 13 | 31.5 | 32 | 7 | 13.5 | 14 |
| | Dimensons(WxDxH)mm | 145x400x220 | 195x455x350 | | 145x400x220 | 195x455x350 | |

# Technical Specification

| Product Series | | On Line UPS with LCD Display (1~3kVA) | | | | | |
|---|---|---|---|---|---|---|---|
| Model | | G1KN | G1KNS | G2KN | G2KNS | G3KN | G3KNS |
| | | G1KD | G1KDS | G2KD | G2KDS | G3KD | G3KDS |
| Capacity | VA/W | 1000VA/700W | | 2000VA/1400W | | 3000VA/2100W | |
| Input | | Base on load percentage (100%-80% / 80%-70% / 70%-80% / 60%-0%) | | | | | |
| | Low Line Transfer | 160VAC/140VAC/120VAC/110VAC ± 5VAC | | | | | |
| | Low Line Comeback | 175VAC ± 5VAC | | | | | |
| | High Line Transfer | 300VAC ± 5VAC | | | | | |
| | High Line Comeback | 285VAC ± 5VAC | | | | | |
| | Frequency Range | 50Hz: 46~54Hz; 60Hz: 56~64Hz | | | | | |
| | Phase | Single phase with ground | | | | | |
| | Power Factor | ≥0.98 | | | | | |
| Output | Voltage | 220VAC/230VAC/240VAC | | | | | |
| | Voltage Regulation | ± 2% | | | | | |
| | Frequency | Synchronization range (line mode); 50 or 60 x (1 ± 0.2%)Hz (Battery mode) | | | | | |
| | Current Crest Ratio | 3:1 | | | | | |
| | Voltage Distortion | ≤3% THD (Linear Load) | | ≤4% THD (Linear Load) | | | |
| | | ≤6% THD (Non-Linear Load) | | ≤7% THD (Non-Linear Load) | | | |
| | Output Waveform | Pure Sinewave | | | | | |
| Battery | Battery Type | 12V/7Ah | Depending on the capacity of external batteries | 12V/7Ah | Depending on the capacity of external batteries | 12V/7Ah | Depending on the capacity of external batteries |
| | Numbers of Batteries | 3 | | 8 | | 8 | |
| | Backup Time(Full Load) | > 5 minutes | | > 9 minutes | | > 5 minutes | |
| | Recharge Time | 5 hours to 90% | | 5 hours to 90% | | 5 hours to 90% | |
| | Charging Current(Max.) | 1.0A | 8A | 1.0A | 8A | 1.0A | 8A |
| | Charging Voltage | 41.1Vdc ± 0.6V | | 110Vdc ± 0.4V | | 110Vdc ± 0.4V | |
| Transfer Time | AC to DC | Zero | | | | | |
| | Inverter to Bypass | 2.5ms(Typical) | | | | | |
| Indicators | Status | Load Level / Battery Level / Battery Mode / AC Mode / Bypass Mode / Fault | | | | | |
| Audible Alarm | Battery Mode | Sounding every 4 seconds | | | | | |
| | Low Battery | Sounding every second | | | | | |
| | Overload | Sounding twice every second | | | | | |
| | Fault | Continuously Sounding | | | | | |
| Interface | Smart RS232 | Software supports Windows family, Linux, Sun Solaris, IBM Aix, Compaq True64, SGI IRIX, FreeBSD, HP-UX and MAC | | | | | |
| | SNMP(optional) | Power management from SNMP manager and web browse | | | | | |
| | USB(optional) | Windows family and Mac OS | | | | | |
| Environmental | Operating Temperature | 0~40°C | | | | | |
| | Relative Humidity | 20-90%(NON-CONDENSING) | | | | | |
| | Noise Level | <45dB@1 Meter | | <50dB@1 Meter | | | |
| Physical Feature | Weight | 13kgs | 7kgs | 32kgs | 15kgs | 33kgs | 16kgs |
| | Dimensions(WxDxH) mm | 145x400x220 | | 195x450x350 | | | |

# Technical Specification

| Product Series | | On Line UPS Parallel Redundancy (6~10kVA 1Ph/1Ph) | | | | On Line UPS Parallel Redundancy (10~20kVA 3Ph/1Ph) | | |
|---|---|---|---|---|---|---|---|---|
| Model | | G6KN | G6KNS | G10KN | G10KNS | 3G10KNS | 3G15KNS | 3G20KNS |
| | | G6KD | G6KDS | G10KD | G10KDS | 3G10KDS | 3G15KDS | 3G20KDS |
| Capacity | VA/W | 6kVA/4.2kW | | 10kVA/7kW | | 10kVA/7kW | 15kVA/10.5kW | 20kVA/14kW |
| Input | Low Line Transfer | 176VAC ± 3VAC | | | | 304VAC ± 3VAC | | |
| | Low Line Comeback | 185VAC ± 3VAC | | | | 322VAC ± 3VAC | | |
| | High Line Transfer | 276VAC ± 3VAC | | | | 478VAC ± 3VAC | | |
| | High Line Comeback | 266VAC ± 3VAC | | | | 461VAC ± 3VAC | | |
| | Frequency Range | 50Hz: 46Hz~54Hz; 60Hz: 56Hz~64Hz | | | | | | |
| | Phase | Single phase with ground | | | | Three phase with ground | | |
| | Power Factor | ≥ 0.98 | | | | ≥ 0.95 | | |
| Output | Voltage | 220VAC/230VAC/240VAC | | | | | | |
| | Voltage Regulation | ± 1% | | | | | | |
| | Frequency | Synchronization range (line mode); 50 or 60 x (1 ± 0.05%)Hz (Battery mode) | | | | | | |
| | Current Crest Ratio | 3:1 | | | | | | |
| | Voltage Distortion | ≤ 2% THD(Linear Load) | | ≤ 6% THD(Non-Linear Load) | | | | |
| | Output Waveform | Pure Sinewave | | | | | | |
| Battery | Battery Type | 12V/7Ah | | 12V/7Ah | | | | |
| | Numbers of Batteries | 20 | Depending on the capacity of external batteries | 20 | Depending on the capacity of external batteries | | | |
| | Backup Time(Full Load) | 8 minutes | | 5 minutes | | | | |
| | Recharge Time | 7 hours to90% | | 8 hours to90% | | | | |
| | Charging Current(Max.) | 2A | 4.2A | 2A | 4.2A | 4.2A | 4.2A | 4.2A |
| | Charging Voltage | 274Vdc ± 1V | | | | | | |
| Transfer Time | AC to DC | Zero | | | | | | |
| | Inverter to Bypass | 2.5ms (Typical) | | | | | | |
| Indicators | Status | Load Level / Battery Level / Battery Mode / AC Mode / Bypass Mode / Fault | | | | | | |
| Audible Alarm | Battery Mode | Sounding every 4 seconds | | | | | | |
| | Low Battery | Sounding every second | | | | | | |
| | Overload | Sounding twice every second | | | | | | |
| | Fault | Continuously Sounding | | | | | | |
| Interface | Smart RS232 | Software supports Windows family, Linux, Sun Solaris, IBM Aix, Compaq True64, SGI IRIX, FreeBSD, HP-UX and MAC | | | | | | |
| | SNMP(option) | Power management from SNMP manager and web browse | | | | | | |
| | USB(option) | Windows family and Mac OS | | | | | | |
| Environmental | Operating Temperature | 0~40°C | | | | | | |
| | Relative Humidity | 20-90%(NON-CONDENSING) | | | | | | |
| | Noise Level | <55dB@1 Meter | | | | | <60dB@1 Meter | |
| Physical Feature | Weight | 90kgs | 35kgs | 93kgs | 38kgs | 39kgs | 55kgs | 55kgs |
| | Dimensions(WxDxH) mm | 260x570x717 | | | | | | |

# Technical Specification

| Product Series | | 6~20KVA(1PH/1PH) | | | | 10~30KVA(3PH/1PH) | | | |
|---|---|---|---|---|---|---|---|---|---|
| Model | | GP1106 | GP1110 | GP1115 | GP1120 | GP3110 | GP3115 | GP3120 | GP3130 |
| Capacity | | 6kVA | 10kVA | 15kVA | 20kVA | 10kVA | 15kVA | 20kVA | 30kVA |
| Input | Voltage | 220 x (1 ± 25%) VAC(single phase 2 wire+G) | | | | 220/380 x (1 ± 20%)VAC (three phase 4 wire+G) | | | |
| | Frequency | 50 x (1 ± 10%)Hz | | | | | | | |
| | Power Factor | 0.8(0.95 if UPS with filter) | | | | | | | |
| Output | Voltage | 220 x (1 ± 1%)VAC (steady state) | | | | 220 x (1 ± 2%)VAC (steady state) | | | |
| | Frequency | Free synchronized to the main power(line mode); 50x(1+5%)HZ; (0 ⇌100% abrupt change) | | | | | | | |
| | Power Factor | 0.8(lagging) | | | | | | | |
| | Wave Form | Sine wave | | | | | | | |
| | Distortion | ≤ 3% (linear load), ≤ 5% (non linear load) | | | | | | | |
| | Crest Factor | 3:1 | | | | | | | |
| | Transitory Recover | 220 x (1 ± 4%)VAC (0 ⇌100% Abrupt change) | | | | 220 x (1 ± 5%)VAC (0 ⇌100% Abrupt change) | | | |
| | Efficiency | ≥ 90% | | | | | | | |
| Battery | Type | 12VDC sealed lead acid battery, maintenance free | | | | | | | |
| | Nominal Voltage | 192VDC (16PCS) | | | | | | 384VDC(32PCS) | |
| | Backup Time | As per the request of customer | | | | | | | |
| | Recharge Time | 7~10 hours up to 90% capacity | | | | | | | |
| | Charge Current | 10~25A (adjustable) | | | | | | | |
| Transfer Time | | 0 ms ( AC to DC or DC to AC); < 4 ms (Bypass to Inverter or Inverter to Bypass) | | | | | | | |
| LCD Display | | UPS work situation, AC power situation, Battery situation, Automatic turn to bypass, Overload | | | | | | | |
| Protection | | Over Voltage, Under Voltage, Over Load, Over Temperature, Short Circuit, Lighting Stroke etc. | | | | | | | |
| Alarm | | Over Temperature, Battery, Bypass, AC Power Abnormal, Over Load, Over Voltage | | | | | | | |
| Noise(1m distance) | | ≤50dB | | | | | | | |
| Communicate Interface | | RS232 (or RS422), SNMP card (optional), RJ45 | | | | | | | |
| Cooling way | | FAN | | | | | | | |
| EMC | | EN50091-2, GB9254 | | | | | | | |
| Ability of Antijamming | | IEC61000-4 | | | | | | | |
| Protection D-egree | | IP20 | | | | | | | |
| Environmental | Temperature | 0~40°C | | | | | | | |
| | Humidity | 10%~90% (no dewfall) | | | | | | | |
| | Elevation | < 2000m | | | | | | | |
| Physical Feature | Weight | 95 | 140 | 175 | 225 | 181 | 235 | 285 | 320 |
| | Dimensions(WxDxH)mm | 230x580x712 | 306x585x866 | 415x750x1300 | | 305x585x860 | 416x747x1115 | | 423x772x1190 |

# Technical Specification

| Product Series | | | 10~400KVA(3PH/3PH) | | | | | | |
|---|---|---|---|---|---|---|---|---|---|
| Model | | | GP3310 | GP3315 | GP3320 | GP3330 | GP3340 | GP3360 | GP3380 |
| Capacity | | | 10kVA | 15kVA | 20kVA | 30kVA | 40kVA | 60kVA | 80kVA |
| Input | | Voltage | 220/380 x (1 ± 20%)VAC (three phases+N+G) | | | | | | |
| | | Frequency | 50 x (1 ± 10%)Hz | | | | | | |
| | | Power Factor | 0.8(0.95 if UPS with filter) | | | | | | |
| | Bypass | Phase | Three phase 4 wires+G | | | | | | |
| | Bypass | Voltage | 380 x (1 ± 15%)VAC | | | | | | |
| | Bypass | Frequency | 50 x (1 ± 2%)Hz | | | | | | |
| Output | Voltage | | 380 x (1 ± 1%)VAC (steady state) | | | | | | |
| | Frequency | | 50 x (1 ± 5%)Hz (AC power mode); 50 x (1 ± 0.1%)Hz (battery mode) | | | | | | |
| | Power Factor | | 0.8(lagging) | | | | | | |
| | Wave Form | | Sine wave | | | | | | |
| | Distortion | | ≤ 3% (linear load), ≤ 5% (non linear load) | | | | | | |
| | Transitory Voltage of Dynamic Load | | ± 5%(0 ⇌ 100% Abrupt change) | | | | | | |
| | Transitory Recover Time | | < 10ms( ± 5%) | | | | | | |
| | Unbalance Voltage | | < 3%, < 1%(balanced load) | | | | | | |
| | Overload Capability | | 150% for 1 minute, 125% for 10 minutes, more than 150% for 200ms | | | | | | |
| | Crest Factor | | 3:1 | | | | | | |
| | Efficiency | | ≥ 90%, 95%(ECO mode) | | | | | | |
| Battery | Type | | 12VDC sealed lead acid battery, maintenance free | | | | | | |
| | Nominal Voltage | | 384VDC (32PCS) | | | | | | |
| | Recharge Time | | < 10 hours up to 90% capacity | | | | | | |
| | Charge Current | | 10~25A (adjustable) | | | | | | |
| Transfer Time | | | 0 ms ( AC to DC or DC to AC); < 4 ms (Bypass to Inverter or Inverter to Bypass) | | | | | | |
| LCD Display | | | UPS work situation, AC power situation, Battery situation, Automatic turn to bypass, Overload | | | | | | |
| Protection | | | Over Voltage, Under Voltage, Over Load, Over Temperature, Short Circuit, Lighting Stroke etc. | | | | | | |
| Alarm | | | Over Temperature, Battery, Bypass, AC Power Abnormal, Over Load, Over Voltage | | | | | | |
| Noise(1m distance) | | | < 50dB | | <55dB | | < 65dB | | |
| Communicate Interface | | | RS232 (or RS422), SNMP card (optional), RJ45 | | | | | | |
| Cooling way | | | Fan | | | | | | |
| EMC | | | EN50091-2, GB9254 | | | | | | |
| Ability of Antijamming | | | IEC61000-4 | | | | | | |
| Protection D-egree | | | IP20 | | | | | | |
| Environmental | Temperature | | 0~40°C | | | | | | |
| | Humidity | | 10%~90% (no dewfall) | | | | | | |
| | Elevation | | < 2000m | | | | | | |
| Physical Feature | Weight | | 210 | 220 | 240 | 282 | 330 | 450 | 570 |
| | Dimensions(WxDxH)mm | | 700x520x1100 | | 800x600x1200 | | 900x600x1500 | | 1250x900x1600 |

# Technical Specification

| Product Series | | | 10~400KVA(3PH/3PH) | | | | | | |
|---|---|---|---|---|---|---|---|---|---|
| Model | | | GP33100 | GP33120 | GP33160 | GP33200 | GP33250 | GP33300 | GP33400 |
| Capacity | | | 100kVA | 120kVA | 160kVA | 200kVA | 250kVA | 300kVA | 400kVA |
| Input | | Voltage | 220/380 x (1 ± 20%)VAC (three phases+N+G) | | | | | | |
| | | Frequency | 50 x (1 ± 10%)Hz | | | | | | |
| | | Power Factor | 0.8(0.95 if UPS with filter) | | | | | | |
| | Bypass | Phase | Three phase 4 wires+G | | | | | | |
| | Bypass | Voltage | 380 x (1 ± 15%)VAC | | | | | | |
| | Bypass | Frequency | 50 x (1 ± 2%)Hz | | | | | | |
| Output | Voltage | | 380 x (1 ± 1%)VAC (steady state) | | | | | | |
| | Frequency | | 50 x (1 ± 5%)Hz (AC power mode); 50 x (1 ± 0.1%)Hz (battery mode) | | | | | | |
| | Power Factor | | 0.8(lagging) | | | | | | |
| | Wave Form | | Sine wave | | | | | | |
| | Distortion | | ≤ 3% (linear load), ≤ 5% (non linear load) | | | | | | |
| | Transitory Voltage of Dynamic Load | | ± 5%(0 ⇌ 100% Abrupt change) | | | | | | |
| | Transitory Recover Time | | < 10ms( ± 5%) | | | | | | |
| | Unbalance Voltage | | < 3%, < 1%(balanced load) | | | | | | |
| | Overload Capability | | 150% for 1 minute, 125% for 10 minutes, more than 150% for 200ms | | | | | | |
| | Crest Factor | | 3:1 | | | | | | |
| | Efficiency | | ≥ 90%, 95%(ECO mode) | | | | | | |
| Battery | Type | | 12VDC sealed lead acid battery, maintenance free | | | | | | |
| | Nominal Voltage | | 396VDC (33PCS) | | | | | | |
| | Recharge Time | | < 10 hours up to 90% capacity | | | | | | |
| | Charge Current | | 10~25A (adjustable) | | | | | | |
| Transfer Time | | | 0 ms ( AC to DC or DC to AC); < 4 ms (Bypass to Inverter or Inverter to Bypass) | | | | | | |
| LCD Display | | | UPS work situation, AC power situation, Battery situation, Automatic turn to bypass, Overload | | | | | | |
| Protection | | | Over Voltage, Under Voltage, Over Load, Over Temperature, Short Circuit, Lighting Stroke etc. | | | | | | |
| Alarm | | | Over Temperature, Battery, Bypass, AC Power Abnormal, Over Load, Over Voltage | | | | | | |
| Noise(1m distance) | | | < 65dB | | <68dB | | | | |
| Communicate Interface | | | RS232 (or RS422), SNMP card (optional), RJ45 | | | | | | |
| Cooling way | | | Fan | | | | | | |
| EMC | | | EN50091-2, GB9254 | | | | | | |
| Ability of Antijamming | | | IEC61000-4 | | | | | | |
| Protection D-egree | | | IP20 | | | | | | |
| Environmental | Temperature | | 0~40°C | | | | | | |
| | Humidity | | 10%~90% (no dewfall) | | | | | | |
| | Elevation | | < 2000m | | | | | | |
| Physical Feature | Weight | | 700 | 780 | 970 | 1150 | 1250 | 1450 | 1450 |
| | Dimensions(WxDxH)mm | | 1250x900x1600 | | | 2000x900x1800 | | 2400x900x1800 | |

# DC/AC Inverter

## 1. Application

DC/AC inverter is designed for switching DC24V to AC110-220V. They can be used outdoors or on home appliance as emergency power. Usually, cord with AC power socket and the DC power cord with DC battery. When the load connects to the DC power cord with DC power, if the commercial power falls, the inverter will convert the batttery voltage to AC voltage and go on supplying. When the commercial power restall, the inverter will switch to charge the battery by itself. When the battery is fully charged, it will stop automatically.


ZUP-500VA

## 2. Feature

AC voltage available for AC 100V, 110V, 120V, 220V, 230V or 240V at request.
Each unit contains two AC sockets available for two pin plugs.
Automatic function change for inverter or batttery charge.
Selective 4 AC voltage for each unit, such as when AC 110V, it will be available for AC 110V, 120V, 130V and 140V.
Different led indicator for function of inverter and charger.
Each unit contain a AC cord for AC input voltage besides.
Model ZUP-300 and ZUP-300A contains an extra power cord for DC battery.
Products applicable for:
A. Personal computer.
B. Various video/audio equipment. (TV, casset, tape record, etc.)
C. Small motor equipment.
D. Various lighting equipment.
Protection:
a. Protection for short circuit and polarity reverse of battery.
b. Overload fuse protection for charging current, input voltage and output voltage.


ZUP-1000VA

## 3. Specification

| Type | DC Voltage | Capacity | Charging Current |
|---|---|---|---|
| ZUP-300VA | DC12V, 24V | max.300W | max.25A |
| ZUP-500VA | DC12V, 24V | max.500W | max.35A |
| ZUP-1000VA | DC12V, 24V | max.1000W | max.35A |
| ZUP-1500VA | DC12V, 24V | max.1500W | max.45A |
| ZUP-2000VA | DC12V, 24V | max.2000W | max.60A |
| ZUP-3000VA | DC24V,48V | max. 3000W | max. 90A |
| ZUP-5000VA | DC24V,48V | max. 5000W | max. 150A |


ZUP-2000VA

Two outlets are incorporated for the simultaneous use of both the 110V and 220V outlets.
The sockets are of a type that is capable of accepting two different types of plugs prongs and blades of two different forms.
Built-in overload protection circuit and over discharge protection circuit.

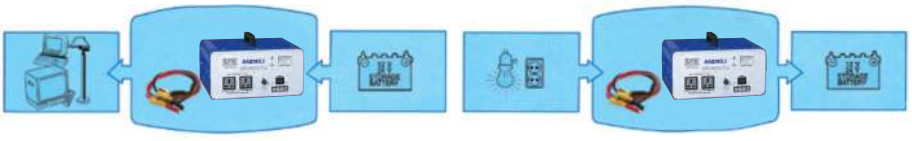

Batteries can be easily charged using home AC power source.

Battery charging will be made safer than using automatic charging voltage control system.

# Car Inverter 70W-200W

8030U

8162U

8023U

| Model No. | 8030U | 8162U | 8023U | 8023U-B | 8081U | 8200U |
|---|---|---|---|---|---|---|
| Input Voltage | DC 12V (DC 11-15V) | | | | | |
| AC Output | AC 100V ± 10%, AC 110V ± 10%, AC 220 - 240V | | | | | |
| Output Frequency | 55 ± 3Hz, 60 ± 3Hz, 50 ± 3Hz | | | | | |
| USB Output | DC 5V, 500mA (Optional: 1000mA) | | | | | |
| Max Output Power | 75W(10min) | 150W | 150W | 150W | 150W | 200W |
| Continuous Power | 60W | 150W | 150W | 150W | 150W | 200W |
| Peak Power | 150W | 300W | 300W | 300W | 300W | 400W |
| Output Wave | Modified Sine Wave | | | | | |
| Effiency | ≥85% | | | | | |
| No Load Current | <0.35A | | | | | |
| Input Under Voltage Shut Down | DC 10.5V ± 0.3V | | | | | |
| Input Over Voltage Shut Down | DC 15V - 16V | | | | | |
| Over Current Protection | 9A - 11A | 18A - 22A | 18A - 22A | 18A - 22A | 18A - 22A | 18A - 22A |
| Over Heating Protection | Yes | | | | | |
| Ambient Temperature | 5 - 35 Centigrade | | | | | |
| FUSE | 1×10A | 1×25A | | | | |
| Cooling Method | × | By Fan | By Fan | By Fan | By Fan | By Fan |
| G.W.(kgs) | 11.6 | 13.2 | 9.6 | 12.0 | 15.5 | 15.5 |
| N.W.(kgs) | 9.6 | 12.2 | 8.0 | 10.0 | 13.5 | 13.5 |
| Size(mm) | 120×60×39 | 196×59×43 | 130×73×48 | 90×75×48 | 107×67×45 | 107×67×45 |
| Packing(ctn) | 50pcs | 30pcs | 40pcs | 40pcs | 40pcs | 40pcs |
| Meas(cm) | 47.5×29×57 | 51.5×57×32 | 95. 5×32×29.5 | 59.5×38.5×37.5 | 47.5×29×57 | 47.5×29×57 |

Multiple American Italian European Australia

8023U-B

8081U

8200U

# Modified Sine Wave Power Inverter


8030U


8034U


8035U

| Model No. | | 8033U | 8034U | 8035U | 8036U | 8800 | 81000 |
|---|---|---|---|---|---|---|---|
| Input Voltage | | DC 12V (DC 11-15V) | | | | | |
| | | DC 24V (DC 22-30V) | | | | | |
| Output Voltage | | AC 100V ± 10%, AC 110V ± 10%, AC 220 - 240V | | | | | |
| Output Frequency | | 55 ± 3Hz, 60 ± 3Hz, 50 ± 3Hz | | | | | |
| USB Output (If have) | | DC 5V, 500mA (Optional: 1000mA, 2100mA) | | | | | |
| Continuous Power | | 300W | 400W | 500W | 600W | 800W | 1000W |
| Peak Power | | 600W | 800W | 1000W | 1200W | 1600W | 2000W |
| Output Wave | | Modified Sine Wave | | | | | |
| Effiency | | ≥85% | | | | | |
| Input Under Voltage Alarm | DC 12V Input | DC 10.2 – 10.8V | | | | | |
| | DC 24V Input | DC 20.4 – 21.6V | | | | | |
| Input Under Voltage Shut Down | DC 12V Input | DC 9.2 – 9.8V | | | | | |
| | DC 24V Input | DC 18.4 – 19.6V | | | | | |
| Input Over Voltage Shut Down | DC 12V Input | DC 15 – 16V | | | | | |
| | DC 24V Input | DC 30 – 32V | | | | | |
| Ambient Temperature | | 5 - 35°C | | | | | |
| Cooling Method | | Fan | | | | | |
| Input Protection | | Reverse Polarity (Fuse), Under Voltage, Over Voltage | | | | | |
| Output Protection | | Short Circuit, Overload, Over Temperature | | | | | |
| G.W.(kgs) | | 19 | 26.0 | 26.0 | 26.5 | 21.5 | 22 |
| N.W.(kgs) | | 18 | 24 | 24 | 24.5 | 20.5 | 21 |
| Size(mm) | | 180x102x60 | 180x102x60 | 230x102x60 | 230x102x60 | 230x130x65 | 250x130x65 |
| Packing(ctn) | | 20pcs | 20pcs | 20pcs | 20pcs | 10pcs | 10pcs |
| Meas(cm) | | 57.5x34x45 | 57.5x34x45 | 57.5x34x45 | 57.5x34x45 | 56x30.5x35 | 56x30.5x35 |

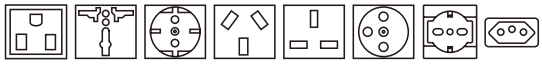



8036U


8800


81000

# Modified Sine Wave Power Inverter


81200


81500

| Model No. | | 81200 | 81500 | 82000 | 82500 | 83000 |
|---|---|---|---|---|---|---|
| Input Voltage | | DC 12V (DC 11-15V) | | | | |
| | | DC 24V (DC 22-30V) | | | | |
| Output Voltage | | AC 100V ± 10%, AC 110V ± 10%, AC 220 - 240V | | | | |
| Output Frequency | | 55 ± 3Hz, 60 ± 3Hz, 50 ± 3Hz | | | | |
| USB Output (If have) | | DC 5V, 500mA (Optional: 1000mA, 2100mA) | | | | |
| Continuous Power | | 1200W | 1500W | 2000W | 2500W | 3000W |
| Peak Power | | 2400W | 3000W | 4000W | 5000W | 6000W |
| Output Wave | | Modified Sine Wave | | | | |
| Effiency | | ≥85% | | | | |
| Input Under Voltage Alarm | DC 12V Input | DC 10.2 – 10.8V | | | | |
| | DC 24V Input | DC 20.4 – 21.6V | | | | |
| Input Under Voltage Shut Down | DC 12V Input | DC 9.2 – 9.8V | | | | |
| | DC 24V Input | DC 18.4 – 19.6V | | | | |
| Input Over Voltage Shut Down | DC 12V Input | DC 15 – 16V | | | | |
| | DC 24V Input | DC 30 – 32V | | | | |
| Ambient Temperature | | 5 - 35°C | | | | |
| Cooling Method | | Fan | | | | |
| Input Protection | | Reverse Polarity (Fuse), Under Voltage, Over Voltage | | | | |
| Output Protection | | Short Circuit, Overload, Over Temperature | | | | |
| G.W.(kgs) | | 23 | 21 | 17.7 | 19.3 | 19.5 |
| N.W.(kgs) | | 22 | 20 | 16.7 | 18.3 | 18.5 |
| Size(mm) | | 250×130×65 | 280×130×65 | 420×200×102 | 420×200×102 | 420×200×102 |
| Packing(ctn) | | 10pcs | 8pcs | 3pcs | 3pcs | 3pcs |
| Meas(cm) | | 56×30.5×35 | 45.5×33.5×35 | 49×42.5×25 | 49×42.5×25 | 49×42.5×25 |

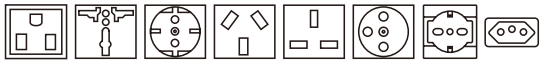

American Universal Germany Australia UK French Italian Brazil

82000

82500

83000

# Pure Sine Wave Power Inverter

PSW8300

PSW8600

PSW81200

| Model No. | | PSW8300 | PSW8600 | PSW81200 | PSW81500 | PSW82000 | PSW83000 |
|---|---|---|---|---|---|---|---|
| Input Voltage | | DC 12V (DC 11-15V) | | | | | |
| | | DC 24V (DC 22-30V) | | | | | |
| Output Voltage | | AC 100V ± 10%, AC 110V ± 10%, AC 220 - 240V | | | | | |
| Output Frequency | | 55 ± 3Hz, 60 ± 3Hz, 50 ± 3Hz | | | | | |
| USB Output | | DC 5V, 500mA (Optional: 1000mA, 2100mA) | | | | | |
| Continuous Power | | 300W | 600W | 1200W | 1500W | 2000W | 3000W |
| Peak Power | | 600W | 1200W | 2400W | 3000W | 4000W | 6000W |
| Output Wave | | Pure Sine Wave | | | | | |
| THD | | ≤5% | | | | | |
| Effiency | | ≥85% | | | | | |
| Input Under Voltage Alarm | DC 12V Input | DC 10.2 – 10.8V | | | | | |
| | DC 24V Input | DC 20.4 – 21.6V | | | | | |
| Input Under Voltage Shut Down | DC 12V Input | DC 9.2 – 9.8V | | | | | |
| | DC 24V Input | DC 18.4 – 19.6V | | | | | |
| Input Over Voltage Shut Down | DC 12V Input | DC 15 – 16V | | | | | |
| | DC 24V Input | DC 30 – 32V | | | | | |
| Ambient Temperature | | 5 - 35°C | | | | | |
| Cooling Method | | Fan | | | | | |
| Input Protection | | Reverse Polarity (Fuse), Under Voltage, Over Voltage | | | | | |
| Output Protection | | Short Circuit, Overload, Over Temperature | | | | | |
| G.W.(kgs) | | 9.6 | 11.3 | 12.1 | 12.2 | 8 | 10 |
| N.W.(kgs) | | 9.0 | 10.8 | 11.6 | 11.7 | 7.5 | 9.5 |
| Size(mm) | | 205x203x78 | 237x203x78 | 335x203x78 | 335x203x78 | 335x250x180 | 335x250x180 |
| Packing(ctn) | | 5pcs | 5pcs | 3pcs | 3pcs | 1pc | 1pc |
| Meas(cm) | | 66x26x24.5 | 66x29x24.5 | 40x39.5x24.5 | 40x39.5x24.5 | 39x31.5x25 | 39x31.5x25 |

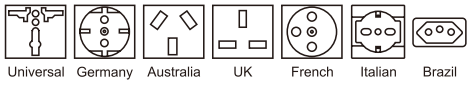


PSW81500

PSW82000

PSW83000

# Pure Sine Wave Inverter With Charger

PIC-6021U

PIC-6022U

PIC-6023U

| Model No. | | PIC-6021U | PIC-6022U | PIC-6023U | PIC-6024U | PIC-6026U | PIC-6028U |
|---|---|---|---|---|---|---|---|
| Input Voltage | | DC 12V (DC 11-15V) | | | | | |
| | | DC 24V (DC 22-30V) | | | | | |
| Output Voltage | | AC 100V ± 10%, AC 110V ± 10%, AC 220 - 240V | | | | | |
| Output Frequency | | 55 ± 3Hz, 60 ± 3Hz, 50 ± 3Hz | | | | | |
| USB Output | | DC 5V, 500mA (Optional: 1000mA, 2100mA) | | | | | |
| Continuous Power | | 300W | 600W | 1200W | 1500W | 2000W | 3000W |
| Peak Power | | 600W | 1200W | 2400W | 3000W | 4000W | 6000W |
| Output Wave | | Pure Sine Wave | | | | | |
| Effiency | | ≥85% | | | | | |
| Input Under Voltage Alarm | DC 12V Input | DC 10.2 – 10.8V | | | | | |
| | DC 24V Input | DC 20.4 – 21.6V | | | | | |
| Input Under Voltage Shut Down | DC 12V Input | DC 9.2 – 9.8V | | | | | |
| | DC 24V Input | DC 18.4 – 19.6V | | | | | |
| Input Over Voltage Shut Down | DC 12V Input | DC 15 – 16V | | | | | |
| | DC 24V Input | DC 30 – 32V | | | | | |
| Ambient Temperature | | 5 - 35°C | | | | | |
| Cooling Method | | Fan | | | | | |
| Input Protection | | Reverse Polarity (Fuse), Under Voltage, Over Voltage | | | | | |
| Output Protection | | Short Circuit, Overload, Over Temperature | | | | | |
| Charge Mode | Input Voltage | AC 100V - 125V, AC 200V - 250V | | | | | |
| | Charging Current | 12V: 10A, 24V: 5A | | 12V: 20A, 24V: 10A | | 12V: 25A, 24V: 15A | |
| | Transition time | ≤20 ms | | | | | |
| Size(mm) | | 355x214x73 | 355x214x73 | 460x214x73 | 460x214x73 | 355x250x180 | 355x250x180 |
| Packing(ctn) | | 5pcs | 5pcs | 2pcs | 2pcs | 1pc | 1pc |
| Meas(cm) | | 42.5x39x25 | 42.5x39x25 | 55x26.5x25 | 55x26.5x25 | 46x31.5x25 | 48x31.5x25 |

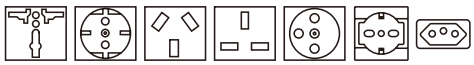

Universal Germany Australia UK French Italian Brazil

PIC-6024U

PIC-6026U

PIC-6028U

# Modified Sine Wave Inverter With Charger

PIC-300

PIC-600

PIC-1000

| Model No. | | PIC-300 | PIC-600 | PIC-1000 | PIC-1600 | PIC-2000 | PIC-2500 | PIC-3000 |
|---|---|---|---|---|---|---|---|---|
| Input Voltage | | DC 12V (DC 11-15V) | | | | | | |
| | | DC 24V (DC 22-30V) | | | | | | |
| Output Voltage | | AC 100V ± 10%, AC 110V ± 10%, AC 220 - 240V | | | | | | |
| Output Frequency | | 55 ± 3Hz, 60 ± 3Hz, 50 ± 3Hz | | | | | | |
| USB Output | | DC 5V, 500mA (Optional: 1000mA, 2100mA) | | | | | | |
| Continuous Power | | 300W | 600W | 1000W | 1600W | 2000W | 2500W | 3000W |
| Peak Power | | 600W | 1200W | 2000W | 3200W | 4000W | 5000W | 6000W |
| Output Wave | | Modified Sine Wave | | | | | | |
| Effiency | | ≥85% | | | | | | |
| Input Under Voltage Alarm | DC 12V Input | DC 10.2 – 10.8V | | | | | | |
| | DC 24V Input | DC 20.4 – 21.6V | | | | | | |
| Input Under Voltage Shut Down | DC 12V Input | DC 9.2 – 9.8V | | | | | | |
| | DC 24V Input | DC 18.4 – 19.6V | | | | | | |
| Input Over Voltage Shut Down | DC 12V Input | DC 15 – 16V | | | | | | |
| | DC 24V Input | DC 30 – 32V | | | | | | |
| Ambient Temperature | | 5 - 35°C | | | | | | |
| Cooling Method | | Fan | | | | | | |
| Input Protection | | Reverse Polarity (Fuse), Under Voltage, Over Voltage | | | | | | |
| Output Protection | | Short Circuit, Overload, Over Temperature | | | | | | |
| Charge Mode | Input Voltage | AC 100V - 125V, AC 200V - 250V | | | | | | |
| | Charging Current | 12V: 5A | | 12V: 15A, 24V: 10A | | 12V: 20A, 24V: 10A | | |
| | Transition time | 2 - 3 s | | | | | | |
| G.W.(kgs) | | 14.8 | 18 | 17 | 18 | 15.2 | 15.8 | 15.8 |
| N.W.(kgs) | | 13.8 | 17 | 16 | 17 | 14.4 | 15 | 15 |
| Size(mm) | | 235x132x62 | 280x132x62 | 240x200x100 | 49x46x25.5 | 57.5x30.5x25 | 57.5x30.5x25 | 57.5x30.5x25 |
| Packing(ctn) | | 10pcs | 10pcs | 3pcs | 2pcs | 2pcs | 2pcs | 2pcs |
| Meas(cm) | | 56x28.5x35 | 56x31.5x35 | 49x46x25.5 | 49x46x25.5 | 57.5x30.5x25 | 57.5x30.5x25 | 57.5x30.5x25 |

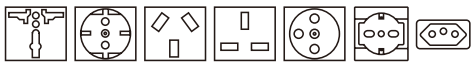

Universal Germany Australia UK French Italian Brazil

PIC-1600

PIC-2000

PIC-2500

PIC-3000

# S9 Series Distribution Transformer

## 1. Application

This kind of product feature has high efficiency and low consumption. It can save a lot of power consumption and operating costs The new S9 Series transformer is impoldered on the basis of the 10 kV Distribution transformer. It accords with the GB1094-96,GB/T6451-99,IEC76 standard.

## 2. Outline and Installation Dimension

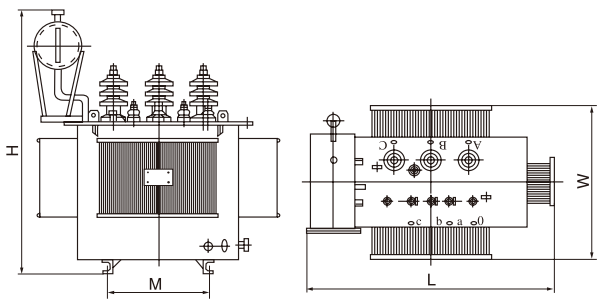


## 3. Technical Specification

| Rated Capacity (kVA) | Voltage Schedule | | | Connecting Group | Consumption(W) | | No-load current (%) | Short circuit imped-ance(%) | Weight(kg) | | | Outline dimension (mm±10%) | | | Gauging Distance |
|---|---|---|---|---|---|---|---|---|---|---|---|---|---|---|---|
| | HV | Tapping | LV | | N0-load (kW) | load (kW) | | | Body | oil | Total | Length | Width | Height | |
| 10 | | | | | 65 | 330 | 3.5 | | 90 | 35 | 150 | 760 | 400 | 950 | 350 × 350 |
| 20 | | | | | 105 | 480 | 3.0 | | 135 | 60 | 225 | 885 | 400 | 955 | 350 × 350 |
| 30 | | | | | 130 | 600 | 2.1 | | 180 | 70 | 285 | 985 | 380 | 1015 | 400 × 400 |
| 50 | | | | | 170 | 870 | 2.0 | | 230 | 75 | 350 | 985 | 510 | 1035 | 400 × 450 |
| 63 | | | | | 200 | 1040 | 1.9 | | 285 | 90 | 430 | 1060 | 465 | 1135 | 400 × 450 |
| 80 | | | | | 250 | 1250 | 1.8 | 4 | 295 | 95 | 475 | 1010 | 775 | 1070 | 400 × 450 |
| 100 | | | | | 290 | 1500 | 1.6 | | 330 | 100 | 520 | 1010 | 740 | 1095 | 400 × 450 |
| 125 | | | | | 340 | 1800 | 1.5 | | 380 | 110 | 600 | 1040 | 770 | 1135 | 400 × 550 |
| 160 | 6 | | | | 400 | 2200 | 1.4 | | 440 | 120 | 685 | 1235 | 735 | 1165 | 550 × 550 |
| 200 | 6.3 | ±5% | | | 480 | 2600 | 1.6 | | 515 | 135 | 800 | 1280 | 765 | 1210 | 550 × 550 |
| 250 | 10 | | 0.4 | Yyn0, | 560 | 3050 | 1.2 | | 610 | 160 | 940 | 1345 | 800 | 1315 | 550 × 550 |
| 315 | 10.5 | (±2x2.5%) | | Dyn11 | 670 | 3650 | 1.1 | | 715 | 180 | 1105 | 1395 | 850 | 1375 | 660 × 660 |
| 400 | 11 | | | | 800 | 4300 | 1.0 | | 880 | 205 | 1310 | 1435 | 820 | 1460 | 660 × 660 |
| 500 | | | | | 960 | 5150 | 1.0 | | 1005 | 230 | 1515 | 1525 | 965 | 1450 | 660 × 660 |
| 630 | | | | | 1200 | 6200 | 0.9 | | 1155 | 265 | 1770 | 1615 | 1080 | 1615 | 660 × 660 |
| 800 | | | | | 1400 | 7500 | 0.8 | | 1420 | 315 | 2160 | 1700 | 1120 | 1705 | 820 × 820 |
| 1000 | | | | | 1700 | 10300 | 0.7 | 4.5 | 1580 | 425 | 2520 | 1750 | 1140 | 1880 | 820 × 820 |
| 1250 | | | | | 1950 | 12000 | 0.6 | | 1940 | 495 | 3040 | 1850 | 1245 | 1835 | 820 × 820 |
| 1600 | | | | | 2400 | 14500 | 0.6 | | 2355 | 560 | 3800 | 1865 | 1285 | 2020 | 820 × 820 |
| 2000 | | | | | 2600 | 17000 | 0.5 | 5 | 3165 | 755 | 4950 | 2300 | 1165 | 2305 | 1070 × 1070 |
| 2500 | | | | | 3000 | 20700 | 0.5 | | 3880 | 1300 | 6580 | 2440 | 1315 | 2490 | 1070 × 1070 |

# SZ9 ON-load Tap-changer Power Transformer

## 1. Application

The SZ9 on-load tap-changer power transformer is widely applies to urban and rural electric network construction. The iron core is in ladder shape and changes the traditional piling way of iron core as well as the inner distribution of magnetic way. It also decrease the no-load consumption, no-load current consumption and noise pollution all by 20%. The new product applies CAD tool and marked with advanced design, reasonable structure, high quality material. It accords with GB1094-1996 and GB/T6451-1999.

## 2. Technical Specification

| Rated Capacity (kVA) | Voltage Schedule | | | Connecting Group | Consumption(W) | | N0-load current (%) | Short circuit imped-ance(%) | Weight(kg) | | | Outline dimension (mm±10%) | | | Gauging Distance |
|---|---|---|---|---|---|---|---|---|---|---|---|---|---|---|---|
| | HV | Tapping | LV | | No-load (kW) | load (kW) | | | Body | oil | Total | Length | Width | Height | |
| 200 | 6<br>6.3<br>10<br>10.5<br>11 | ±4<br>×<br>2.5% | 0.4 | Yyn0,<br>Dyn11 | 430 | 3060 | 1.6 | 4 | 610 | 450 | 1430 | 950 | 950 | 1600 | 550 × 550 |
| 250 | | | | | 510 | 3600 | 1.5 | | 760 | 500 | 1700 | 1100 | 1100 | 1640 | 550 × 550 |
| 315 | | | | | 610 | 4320 | 1.5 | | 1060 | 550 | 2120 | 1200 | 1200 | 1750 | 660 × 660 |
| 400 | | | | | 740 | 5220 | 1.4 | | 1100 | 660 | 2160 | 1250 | 1250 | 1800 | 660 × 660 |
| 500 | | | | | 870 | 6210 | 1.4 | | 1330 | 700 | 2850 | 1300 | 1300 | 1950 | 660 × 660 |
| 630 | | | | | 1120 | 7650 | 1.3 | | 1850 | 740 | 3410 | 1300 | 1300 | 2110 | 820 × 820 |
| 800 | | | | | 1330 | 9360 | 1.3 | | 1980 | 780 | 3830 | 1480 | 1480 | 2330 | 820 × 820 |
| 1000 | | | | | 1550 | 10980 | 1.3 | 4.5 | 2300 | 1020 | 4800 | 1500 | 1500 | 2525 | 820 × 820 |
| 1250 | | | | | 1880 | 13040 | 1.2 | | 2870 | 1460 | 5950 | 1530 | 1530 | 2730 | 820 × 820 |
| 1600 | | | | | 2400 | 15570 | 1.1 | | 3450 | 1730 | 6950 | 1550 | 1550 | 3000 | 820 × 820 |

# S9-M.R, S11-M-M.R Ribbon-wound Core Oil Complete Transformer

## 1. Application

This type of transformer adopts high-permedibility cool-rolling si-steel piece as iron core. It is processed with big fill factor and there is no spacing inside the mangnetic path. The HV and LV coil is continuously winded around the core with good concentricity and compact winding. The product is of low consumption and slight noise pollution by combining new generation of technolgy good performance and energy saving. It is widely used in power distribution system.

## 2. Technical Specification

S11-M.R Series three-phase ribbon-wound core oil complete sealed distribution transformer

| Capacity (kVA) | Voltage schedule | | Connecting group | Consumption | | Short-circuit impedance (%) | No load current (%) | Outline dimension mm(± 10%) | | | Weight(kg) (± 10%) | | Gauging distance (mm) |
|---|---|---|---|---|---|---|---|---|---|---|---|---|---|
| | HV(kV) | LV(kV) | | No load(W) | load(W) | | | Length | Width | Height | Oil | Total | |
| 30 | 6<br>6.3<br>11 | 0.4 | Dy11<br>Yyn0 | 90 | 600 | 4<br>4.5 | 0.6 | 1020 | 600 | 1090 | 95 | 370 | 400 x 550 |
| 50 | | | | 120 | 870 | | 0.6 | 1050 | 620 | 1120 | 110 | 450 | 400 x 400 |
| 63 | | | | 140 | 1040 | | 0.57 | 1120 | 650 | 1150 | 120 | 520 | 550 x 550 |
| 80 | | | | 175 | 1250 | | 0.54 | 1160 | 670 | 1170 | 130 | 570 | 550 x 550 |
| 100 | | | | 200 | 1500 | | 0.48 | 1200 | 700 | 1210 | 150 | 640 | 550 x 550 |
| 125 | | | | 235 | 1800 | | 0.45 | 1250 | 730 | 1250 | 170 | 750 | 550 x 550 |
| 160 | | | | 280 | 2200 | | 0.39 | 1290 | 750 | 1300 | 200 | 860 | 550 x 550 |
| 200 | | | | 335 | 2600 | | 0.36 | 1330 | 780 | 1345 | 245 | 990 | 550 x 550 |
| 250 | | | | 390 | 3050 | | 0.33 | 1370 | 780 | 1410 | 270 | 1230 | 660 x 660 |
| 315 | | | | 465 | 3650 | | 0.3 | 1420 | 800 | 1470 | 290 | 1380 | 660 x 660 |
| 400 | | | | 560 | 4300 | | 0.3 | 1460 | 800 | 1530 | 320 | 1760 | 660 x 660 |
| 500 | | | | 670 | 5100 | | 0.27 | 1505 | 805 | 1590 | 350 | 1960 | 660 x 660 |
| 630 | | | | 840 | 6200 | | 0.27 | 1590 | 850 | 1650 | 400 | 2400 | 660 x 660 |
| 800 | | | | 980 | 7500 | | 0.27 | 1655 | 935 | 1690 | 550 | 2530 | 820 x 820 |
| 1000 | | | | 1150 | 10300 | | 0.27 | 1755 | 1035 | 1750 | 630 | 2840 | 820 x 820 |
| 1250 | | | | 1360 | 12800 | | 0.27 | 1895 | 1125 | 1820 | 710 | 3300 | 820 x 820 |
| 1600 | | | | 1640 | 14500 | | 0.27 | 1970 | 1240 | 1950 | 830 | 3640 | 820 x 820 |

S9-M.R Series three-phase ribbon-wound core oil complete sealed power distribution transformer

| Capacity (kVA) | Voltage schedule | | Connecting group | Consumption | | Short-circuit impedance (%) | No load current (%) | Outline dimension mm(± 10%) | | | Weight(kg) (± 10%) | | Gauging distance (mm) |
|---|---|---|---|---|---|---|---|---|---|---|---|---|---|
| | HV(kV) | LV(kV) | | No load(W) | load(W) | | | Length | Width | Height | Oil | Total | |
| 30 | 6<br>6.3<br>11<br>± 2x<br>2.5%<br>or<br>5% | 0.4 | Dy11<br>Yyn0 | 130 | 600 | 4<br>4.5 | 0.6 | 1000 | 590 | 980 | 80 | 320 | 400 x 400 |
| 50 | | | | 170 | 870 | | 0.6 | 1100 | 610 | 1035 | 90 | 400 | 400 x 400 |
| 63 | | | | 200 | 1040 | | 0.57 | 1050 | 630 | 1055 | 100 | 460 | 550 x 550 |
| 80 | | | | 240 | 1250 | | 0.54 | 1080 | 650 | 1120 | 110 | 510 | 550 x 550 |
| 100 | | | | 290 | 1500 | | 0.48 | 1090 | 680 | 1160 | 120 | 570 | 550 x 550 |
| 125 | | | | 340 | 1800 | | 0.45 | 1130 | 710 | 1210 | 130 | 670 | 550 x 550 |
| 160 | | | | 400 | 2200 | | 0.39 | 1240 | 730 | 1280 | 160 | 780 | 550 x 550 |
| 200 | | | | 480 | 2600 | | 0.36 | 1290 | 760 | 1320 | 175 | 920 | 550 x 550 |
| 250 | | | | 560 | 3050 | | 0.33 | 1320 | 770 | 1380 | 205 | 1120 | 660 x 660 |
| 315 | | | | 670 | 3650 | | 0.3 | 1335 | 780 | 1440 | 235 | 1250 | 660 x 660 |
| 400 | | | | 800 | 4300 | | 0.3 | 1430 | 790 | 1500 | 285 | 1500 | 660 x 660 |
| 500 | | | | 960 | 5100 | | 0.27 | 1480 | 800 | 1520 | 330 | 1750 | 660 x 660 |
| 630 | | | | 1200 | 6200 | | 0.27 | 1520 | 830 | 1580 | 380 | 2210 | 660 x 660 |
| 800 | | | | 1400 | 7500 | | 0.27 | 1620 | 900 | 1630 | 430 | 2320 | 660 x 660 |
| 1000 | | | | 1700 | 10300 | | 0.27 | 1680 | 920 | 1710 | 550 | 2580 | 660 x 660 |
| 1250 | | | | 1950 | 12800 | | 0.27 | 1740 | 1060 | 1790 | 670 | 2730 | 820 x 820 |
| 1600 | | | | 2400 | 14500 | | 0.27 | 1870 | 1130 | 1860 | 780 | 2910 | 820 x 820 |

# S9-35kV Series Transformers

## 1. Application

The product conforms to the technical parameters and requirements of IEC60076 and China Standard GB1094 & GB/T6451, and a series of significant innovation is applied in aspects of material,design and structure.It has the features of high efficiency and low loss.It can save a lot of operation cost,and the social benefits are very significant.In conclusion,it is a nationally promoted new product and it is deeply favored by customers.

Installation type:indoor/outdoor type

Altitude:≤ 1000m

Installation site:in places without corrosive gases and obvious dusts.

## 2. Applicable Standards

IEC 60076 -1-2-3 2000 Power Transformer

GB1094.1-2-1996 Power Transformer

GB1094.3-5-2003 Power Transformer

GB/T6451-1999 Technical parameters and requirements for three-phase oil-immersed power transformer

## 3. Model Designation

S □ – □ / □

- Voltage class(kV)
- Rated capacity(kVA)
- Performance level code
- Three-phase oil-immersed transformer

## 4. Performance Characteristics

1.The features of this product are high efficiency and low loss.It can save a lot of operation cost, and the social benefits are very significant.

2.The iron cores are made of the imported high-conduction magnetism,cold-roll,and grain-oriented silicon-steel sheets.The iron cores and windings adopt the vacuum drying and vacuum oil-filling processes,which make the internal moisture down to the very low level.

3.The conservator is hermetically sealed,which make the internal running oil to insolate with oxygen and moisture efficiently.

4.The above features guarantee the transformer does not need do replace the oil during the normal operation,greatly decrease the maintenance cost,and prolong the service life.

## 5. Main Technical Parameters of S9-M-50~2500/35 Series of Transformers

| Rated capacity (kVA) | Voltage combination(kV) | | | Connect-ing group | No-load lossess (W) | Load-loss (W)(75˚C) | Short circuit impedance (%) | No-load current (%) | Weight(kg) | | | Overal dimension (mm) | Gauge (mm) |
|---|---|---|---|---|---|---|---|---|---|---|---|---|---|
| | High voltage (kV) | Tapping (%) | Low voltage (kV) | | | | | | Body | Oil | Gross weight | Lengthxwidthxheight | |
| 50 | 35 | ± 5 | 0.4 | Yyno | 215 | 1210 | 6.5 | 2.00 | 230 | 320 | 650 | 1150x720x1200 | 550x550 |
| 100 | | | | | 305 | 2020 | | 1.80 | 380 | 400 | 980 | 1200x740x1300 | 550x550 |
| 125 | | | | | 340 | 2380 | | 1.75 | 440 | 430 | 1100 | 1250x780x1380 | 550x550 |
| 160 | | | | | 360 | 2830 | | 1.65 | 510 | 460 | 1200 | 1300x800x1400 | 660x660 |
| 200 | | | | | 430 | 3300 | | 1.55 | 600 | 500 | 1400 | 1400x840x1500 | 660x660 |
| 250 | | | | | 510 | 3950 | | 1.40 | 690 | 530 | 1500 | 1530x860x1580 | 660x660 |
| 315 | | | | | 610 | 4750 | | 1.40 | 800 | 570 | 1670 | 1600x890x1630 | 660x660 |
| 400 | | | | | 735 | 5750 | | 1.30 | 930 | 650 | 1950 | 1730x50x1700 | 660x660 |
| 500 | | | | | 870 | 6900 | | 1.30 | 1070 | 710 | 2300 | 1800x980x1800 | 820x820 |
| 630 | | | | | 1040 | 8250 | | 1.25 | 1300 | 830 | 2650 | 1900x1000x1850 | 820x820 |
| 800 | | | | | 1250 | 9900 | | 1.05 | 1600 | 900 | 3100 | 1950x1060x1900 | 820x820 |
| 1000 | | | | | 1480 | 12150 | | 1.00 | 1800 | 1080 | 3700 | 1980x1100x1950 | 820x820 |
| 1250 | | | | | 1760 | 14600 | | 0.90 | 2100 | 1150 | 4000 | 2010x1160x1980 | 820x820 |
| 1600 | | | | | 2130 | 17500 | | 0.85 | 2550 | 1250 | 4730 | 2040x1310x2000 | 820x820 |
| 2000 | | | | | 2500 | 20680 | | 0.75 | 3100 | 1400 | 5600 | 2170x1380x2700 | 1070x1070 |
| 2500 | | | | | 2975 | 24500 | | 0.75 | 3650 | 1500 | 6300 | 2300x1450x2900 | 1070x1070 |

## 6. Main Technical Parameters of S9-M-800~20000/35 Series of Transformers

| Rated capacity (kVA) | Voltage combination(kV) | | | Connect-ing group | No-load lossess (W) | Load-loss (W)(75˚C) | Short circuit impedance (%) | No-load current (%) | Weight(kg) | | | Overal dimension (mm) | Gauge (mm) |
|---|---|---|---|---|---|---|---|---|---|---|---|---|---|
| | High voltage (kV) | Tapping (%) | Low voltage (kV) | | | | | | Body | Oil | Gross weight | Lengthxwidthxheight | |
| 800 | 35 | ± 5 | 3.15<br>6.3<br>10.5 | Yd11 | 1250 | 9900 | 6.5 | 1.05 | 1680 | 970 | 3200 | 2000x1100x1950 | 820x820 |
| 1000 | | | | | 1480 | 12150 | | 1.00 | 1800 | 1100 | 3570 | 2100x1200x2100 | 820x820 |
| 1250 | | | | | 1760 | 14650 | | 0.90 | 2060 | 1200 | 4040 | 2150x1250x2150 | 820x820 |
| 1600 | | | | | 2130 | 17500 | | 0.85 | 2400 | 1250 | 4550 | 2200x1340x2180 | 820x820 |
| 2000 | | | | | 2600 | 19350 | | 0.75 | 2820 | 1420 | 5720 | 2250x1380x2210 | 1070x1070 |
| 2500 | | | | | 3150 | 20700 | | 0.75 | 3330 | 1550 | 6000 | 2300x1400x2300 | 1070x1070 |
| 3150 | 35<br>38.5 | ± 5 | 3.15<br>6.3<br>10.5 | | 3860 | 24300 | 7.0 | 0.70 | 3800 | 1670 | 7060 | 2480x1900x2450 | 1070x1070 |
| 4000 | | | | | 4630 | 28800 | | 0.70 | 4500 | 1830 | 8200 | 2800x2250x2500 | 1070x1070 |
| 5000 | | | | | 5480 | 33000 | | 0.60 | 5300 | 2000 | 9500 | 3000x2370x2800 | 1070x1070 |
| 6300 | | | | | 6570 | 36900 | 7.5 | 0.60 | 6550 | 2300 | 11280 | 3200x2520x2900 | 1070x1070 |
| 8000 | | ± 2x2.5 | 3.15<br>6.3<br>10.5 | | 9000 | 40500 | | 0.55 | 8150 | 2700 | 14000 | 3300x2700x3200 | 1475x1475 |
| 10000 | | | | | 10600 | 47700 | | 0.55 | 9600 | 3050 | 16250 | 3400x2800x3400 | 1475x820 |
| 12500 | | | | | 12600 | 56700 | 8 | 0.50 | 11000 | 3660 | 18800 | 3500x2930x3500 | 1475x1070 |
| 16000 | | | | | 15300 | 69300 | | 0.50 | 13650 | 430 | 22250 | 3620x3040x3600 | 1475x1070 |
| 20000 | | | | | 18090 | 83500 | | 0.50 | 15500 | 5530 | 25000 | 3700x3100x3700 | 1475x1475 |

# ZGS11 Series Combined Transformer

## 1. Application

ZGS11 Combined transformer is one of the high-tech product developed by our company on the basis of bad-mounted Transformer. Range of capacity:200-1000 kVA . The product is suitable for the neutral-point distribution system or small-resistance earthing system in a 10kV distribution network, or the neutral-point solid grounding system of a three-phase four-wire system in a 400V distribution network, well-integrated, reliable in power supply, compact, light in weight, low noise, etc; It has two types of cable outlet net type and terminal type.
The product can be placed directly into the load center of 10kV network, thus the line loss in reduced and power distribution reliability in increased.

## 2. Technical Specification

| Type | Rated Capacity (kVA) | Voltage Schedule | | | Vector Group | Consumption(w) | | No-load current (%) |
|---|---|---|---|---|---|---|---|---|
| | | HV(kV) | Tapping | LV(kV) | | No-load (kW) | load (kW) | |
| ZGS9-H(Z)-100/10 | 100 | | | | | 0.29 | 1.50 | 1.6 |
| ZGS9-H(Z)-125/10 | 125 | | | | | 0.34 | 1.80 | 1.5 |
| ZGS9-H(Z)-160/10 | 160 | | | | | 0.40 | 2.20 | 1.4 |
| ZGS9-H(Z)-200/10 | 200 | | | | | 0.48 | 2.60 | 1.3 |
| ZGS9-H(Z)-250/10 | 250 | | ±5% | | | 0.56 | 3.05 | 1.2 |
| ZGS9-H(Z)-315/10 | 315 | | (±2×2.5%) | 0.4 | Dyn11 | 0.67 | 3.65 | 1.1 |
| ZGS9-H(Z)-400/10 | 400 | | | | | 0.80 | 4.30 | 1 |
| ZGS9-H(Z)-500/10 | 500 | | | | | 0.96 | 5.10 | 1 |
| ZGS9-H(Z)-630/10 | 630 | | | | | 1.20 | 6.20 | 0.9 |
| ZGS9-H(Z)-800/10 | 800 | | | | | 1.40 | 7.50 | 0.8 |
| ZGS9-H(Z)-1000/10 | 1000 | | | | | 1.70 | 10.30 | 0.7 |

# Dry-Type Power Transformer

## 1. Application

SC(B) 10 resin-insulated dry-type transformer is designed basing on the Dupont(the USA) NOMEX paper insulation system. the other key components are made from imported materials (such as German MKM copper foil). with advanced manufacturing equipment and technology, the product have high performance, low energy loss, safety and reliability, its especially suitable for high buildings, airports, substations and commercial centers, and any other anti-fire, anti-explode, anti-moisture places etc

## 2. Specification

| Type | Rated current (A) | Voltage combination(kV) | | Connection group | No-load current(%) | Loss(W) | | Impe-dance (%) |
|---|---|---|---|---|---|---|---|---|
| | | HV | LV | | | No-load | load | |
| SC10-30 | 1.73/43.3 | 6 ± 2.5%<br>6 ± 5%<br>10 ± 2.5%<br>10 ± 5%<br>10.5 ± 2.5%<br>10.5 ± 5%<br>11 ± 2.5%<br>11 ± 5% | 0.4 | Dyn11 Yyn0 | 2.5 | 190 | 700 | 4 |
| SC10-50 | 2.89/72.2 | | | | 2.2 | 270 | 990 | |
| SC10-80 | 4.62/115.5 | | | | 2.1 | 370 | 1380 | |
| SC10-100 | 5.77/144.3 | | | | 1.9 | 400 | 1570 | |
| SC10-125 | 7.22/180.4 | | | | 1.7 | 470 | 1840 | |
| SC10-160 | 9.24/230.9 | | | | 1.7 | 540 | 2120 | |
| SC10-200 | 11.6/288.7 | | | | 1.5 | 620 | 2520 | |
| SC10-250 | 14.43/360.8 | | | | 1.5 | 720 | 2750 | |
| SC10-315 | 18.19/454.7 | | | | 1.3 | 880 | 3470 | |
| SC10-400 | 23.09/577.4 | | | | 1.3 | 980 | 3990 | |
| SC10-500 | 28.9/721.7 | | | | 1.3 | 1160 | 4880 | |
| SC10-630 | 36.4/909 | | | | 1.2 | 1340 | 5870 | |
| SC10-630 | 36.4/909 | | | | 1.2 | 1300 | 5960 | |
| SC10-800 | 46.2/1154.7 | | | | 1.2 | 1520 | 6950 | 6 |
| SC10-1000 | 57.7/1443.4 | | | | 1 | 1770 | 8130 | |
| SC10-1250 | 72.2/1804.3 | | | | 1 | 2090 | 9690 | |
| SC10-1600 | 92.4/2309 | | | | 1 | 2450 | 11730 | |
| SC10-2000 | 115.5/2886.7 | | | | 0.9 | 3320 | 14450 | |
| SC10-2500 | 144.3/3608.4 | | | | 0.9 | 4000 | 17170 | |

# 110kV Power Transformer

## 1. Application

110KV oil immersed on-load regulation power transformer has a seires of big changes in material, technical and construction with the characters of small size, light weight, high efficiency with low loss and low noise, stable operation which cutting down large number of loss from energy GRID and minising operation charge, improving the industrial economic benefit, it is used in power plant, transformer substation, big-sized and chemistry factory and etc. the product is according to national and IEC standards.

Installation:outdoor

Ambient temperature:-30˚C-+40˚C

Altitude: 1000m

Relative humidity:90%(25C)

## 2. Specification

| Rated capacity (kVA) | Voltage combination and tap range (kV) | | Vector group | S9 series | | S10 series | | No-load current (%) | Short-circuit inpedance (%) |
|---|---|---|---|---|---|---|---|---|---|
| | HV | LV | | No-load loss | load loss | No-load loss | load loss | | |
| 6300 | 110 ± 2*2.5%<br>121 ± 2*2.5% | 6.3<br>6.6<br>10.5<br>11 | Ynd11 | 9.3 | 36 | 8.4 | 34 | 0.77 | 10.5 |
| 8000 | | | | 11.2 | 45 | 10.1 | 43 | 0.77 | |
| 10000 | | | | 13.2 | 53 | 11.9 | 50 | 0.72 | |
| 12500 | | | | 15.6 | 63 | 14.0 | 60 | 0.72 | |
| 16000 | | | | 18.8 | 77 | 17.0 | 73 | 0.67 | |
| 20000 | | | | 22.0 | 93 | 19.8 | 88 | 0.67 | |
| 25000 | | | | 26.0 | 110 | 23.4 | 105 | 0.62 | |
| 31500 | | | | 30.8 | 133 | 27.7 | 126 | 0.60 | |
| 40000 | | | | 36.8 | 156 | 33.1 | 148 | 0.56 | |
| 50000 | | | | 44.0 | 194 | 39.6 | 184 | 0.52 | |
| 63000 | | | | 52.0 | 234 | 46.8 | 222 | 0.48 | |
| 75000 | | 13.8<br>15.75<br>18<br>20 | | 59.0 | 278 | 53.1 | 264 | 0.42 | 12-14 |
| 90000 | | | | 68.0 | 320 | 61.2 | 304 | 0.38 | |
| 120000 | | | | 84.8 | 397 | 76.3 | 377 | 0.34 | |
| 150000 | | | | 100.2 | 472 | 90.2 | 448 | 0.30 | |
| 180000 | | | | 112.5 | 532 | 101.3 | 505 | 0.25 | |

# ZW8-12 Series High-voltage Vacuum Circuit Breaker



## 1. Application

ZW8-12 series high-voltage vacuum circuit breaker is a kind of outdoor high-voltage switch equipment with 50Hz three-phase alternating current 12Kv rated voltage. It mainly apply to break and close the load current, overload and short-circuit in country power net, city power net and mini-type power system. The general framework of this product adopts the form of three-phase using same box, i.e. put the three-phase arc-extinguishing chamber inside of the metal box. For the SMG material has the advantage of space insulation and grounding insulation, the breaker has perfect performance and high insulation strength.

ZW8-12G is made of ZW8-12 circuit breaker and isolating switch, called the combination of circuit breakers, use for disconnect switches and self-prepare power supply. There are built-in PT and outer PT.

This series of operating mechanism for the CT23-type spring operating mechanism energy storage can be divided into two kinds of electric and manual.

## 2. Technical Parameter

| No. | Item | | Unit | Data | | |
|---|---|---|---|---|---|---|
| | | | | 6.3kA | 12.5kA | 20kA |
| 1 | Rated voltage | | kV | 12 | | |
| 2 | Maximum working voltage | | kV | 12 | | |
| 3 | Rated current | | A | 630 | | |
| 4 | Rated short circuit load dropout current | | kA | 6.3 | 12.5 | 20 |
| 5 | Rated short-circuit making current | | kA | 16 | 31.5 | 50 |
| 6 | Rated peak withstand current | | kA | 16 | 31.5 | 50 |
| 7 | Rated short time 1 min tolerance current | | kA | 6.3 | 12.5 | 20 |
| 8 | Rated insulation level | High-voltage test with working frequency | kV | 42 | | |
| | | Lightning shock pressure | | 75 | | |
| 9 | Rated operating sequence | | | Part-0.3S- Joint points -180S- Joint points | | |
| 10 | Institutions life | | time | 10000 | | |
| 11 | Rated short open circuit current switch frequency | | time | 30 | | |
| 12 | Operating mechanism rated switching voltage | | V | 110,220 | | |
| 13 | Operating mechanism rated points brake current | | V | 110,220 | | |
| 14 | Contact clearance | | mm | 11±1 | | |
| 15 | Super stroke (contact spring compression length) | | mm | 3 | | |
| 16 | Three phase points, closing not synchronism | | ms | ≤2 | | |
| 17 | Contact switching bounce time | | ms | ≤2 | | |
| 18 | Average opening speed | | m/s | 1.0±0.2 | | |
| 19 | Average closing speed | | m/s | 0.7±0.15 | | |
| 20 | Opening time | The highest operating voltage | s | 0.015-0.05 | | |
| | | The minimum operating voltage | | 0.03-0.06 | | |
| 21 | Closing time | | s | 0.025-0.05 | | |
| 22 | Each phase main loop resistance | | μΩ | ≤120(≤200) | | |
| 23 | Action contact allowed to wear accumulative thickness | | mm | 3 | | |

# ZW32-12 Type Outdoor High Voltage Vacuum Circuit Breaker

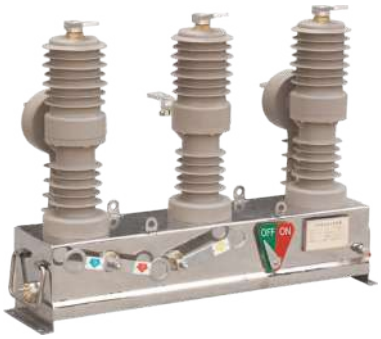

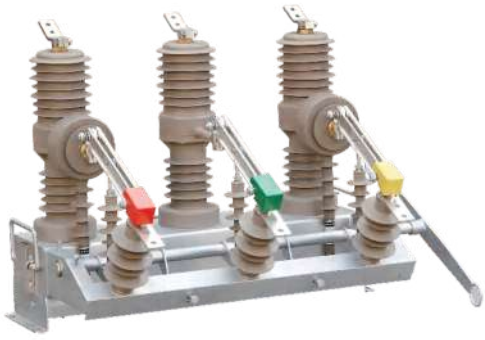

## 1. Application

ZW32-12 type outdoor high voltage vacuum circuit breaker is 3-phase AC50/60Hz outdoor power distribution equipment with the rated voltage of 12kV. It is mainly used to break and close the load current, over load current, and short circuit current in the electric power system. It fits to be used to protect and control the circuit in substation, mining and industrial enterprises. and the frequently operation places such as the rural power network.It can also be the section switch of power grid, after adding controller, distribution network automation is available.

## 2. Technical Parameter

| No. | Item | Unit | Value |
|---|---|---|---|
| 1 | Rated voltage | kV | 12 |
| 2 | Rated frequency | Hz | 50 |
| 3 | Rated current | A | 630 |
| 4 | Rated short-circuit breaking current | kA | 20 |
| 5 | Rated peak withstand current | kA | 50 |
| 6 | Rated short-time withstand current (4 s) | kA | 20 |
| 7 | Rated short circuit close current (peak) | kA | 50 |
| 8 | Mechanical life | times | 10000 |
| 9 | Rated short open circuit current switching frequency | times | 30 |
| 10 | 1 min power frequency withstand voltage (wet) (dry) alternate with, on/fracture | kV | 42/48 |
| 11 | Lightning impulse withstand voltage (peak) relative to ground/fracture | kV | 75/85 |
| 12 | Secondary loop 1 min power frequency withstand voltage | kV | 2 |

## 3. Outline and Installing Dimensions(mm)

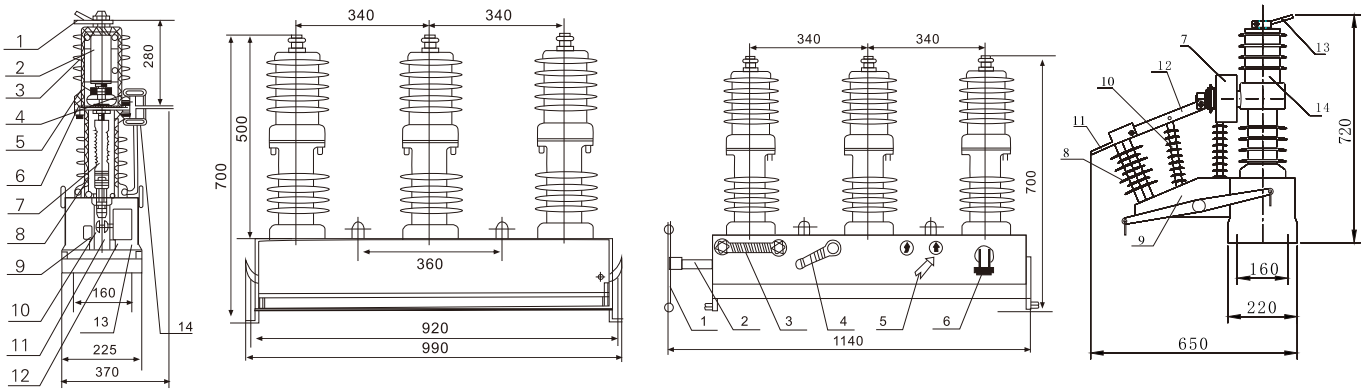


1. the outlet 2. interrupter 3. insulation tube
4. next outlet 5. conductive clip 6. soft link
7. insulation rod 8. contact pressure spring
9. tripping spring 10. driver board 11. body output shaft
12. actuator 13. body box 14. CT

1. Operating handle 2. Isolation spindle 3. manual cut-off circuit breaker handle
4. story energy circuit breaker handle 5. cut-off instructions 6. wring plug
7. CT 8. insulators 9. insolation rack 10. insulation rod
11. wring board(inlet side) 12. isolated blade 13. wring board(outlet side)
14. circuit breaker

# ZW7-40.5 Series Outdoor High Voltage Vacuum Circuit Breaker

## 1. Application

ZW7-40.5 series outdoor high voltage vacuum circuit breaker is used at three phase AC 50Hz, rated voltage is 40.5kV outdoor high-voltage electrical equipment,attached the spring operator or electromagnetic actuator can be well controlled electric opening and closing can also be Manaul storage, manually open and close. Design performance meet GB1984-89 <AC high voltage circuit breakers>; national standards, and meet the IEC-56 <high voltage AC circuit breakers> ; International Electro-technical Commission standards. ZW7-40.5 series vacuum circuit breaker is mainly used for outdoor 35kV power transmission system control and protection also applies to urban and rural power distribution networks and industrial and mining enterprises in the normal operation and short circuit protection purposes. The overall structure of the insulator pillar product type; built vacuum interrupter type on the case, porcelain vase for the next pillar case. For frequent operation place. And has good sealing, anti-aging, high pressure, no burning, no explosion, long life, convenient installation and maintenance features.

## 2. Type and Meaning

Z W 7 - 40.5 / □ - □

- □ — Rated short circuit breaking current
- □ — Rated current
- 40.5 — Rated voltage
- 7 — Design No.
- W — Outdoor
- Z — Vacuum circuit breaker

## 3. Technical Parameter

| No. | Item | Unit | Value | | |
|---|---|---|---|---|---|
| 1 | Rated voltage | KV | 40.5 | | |
| 2 | Rated current | A | 1600 | | |
| 3 | Rated frequency | Hz | 50 | | |
| 4 | Rated short-circuit breaking current(valid) | kA | 20 | 25 | 31.5 |
| 5 | Rated short-circuit making current( peak) | kA | 50 | 63 | 80 |
| 6 | Rated peak withstand current | kA | 50 | 63 | 80 |
| 7 | 4S Rated short time tolerance current | kA | 20 | 25 | 31.5 |
| 8 | 1 min power frequency withstand voltage(valid) | kV | dry-type:95 (wet-type:80) | | |
| 9 | Lightning shock pressure( peak) | kV | 185 | | |
| 10 | Rated operating sequence | | Part-0.3S- Joint points -180S- Joint points | | |
| 11 | Rated short open circuit current switch frequency | times | 20 | | |
| 12 | Operating mechanism rated switching voltage | times | 10000 | | |
| 13 | weight | kg | 1000 | | |

## 4. Main Mechanical Parameters

| No. | Item | Unit | Value |
|---|---|---|---|
| 1 | Arcing chamber contact clearance | mm | 22±2 |
| 2 | Arcing chamber Super stroke | mm | 5±1 |
| 3 | Phases center distance | mm | 710 |
| 4 | Arcing chamber Contact switching bounce time | ms | ≤5 |
| 5 | Three phase points, closing not synchronism | ms | ≤2 |
| 6 | Average closing speed | m/s | 0.75±0.2 |
| 7 | Average opening speed | m/s | 1.7±0.2 |
| 8 | Closing time | ms | 30~100 |
| 9 | Opening time | ms | 15~60 |
| 10 | Each phase main loop resistance(without CT) | μΩ | ≤100 |
| 11 | Action contact allowed to wear accumulative thickness | mm | 3 |

## 5. Outline and Installation Dimension (mm)

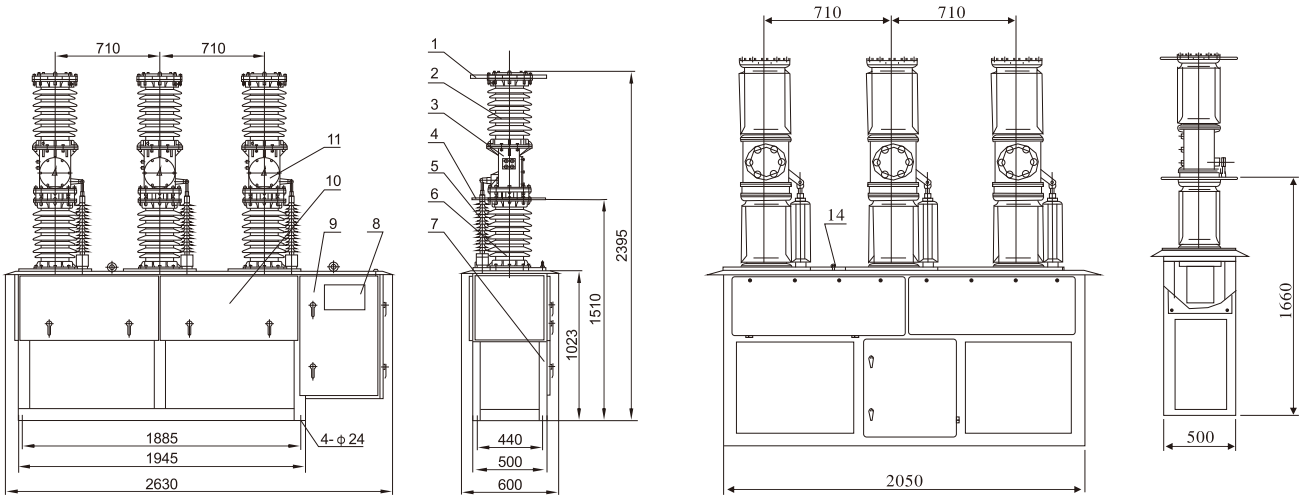


1. Upper terminal
2. Vacuum arcing chamber porcelain sets
3. Holder
4. Under against terminal
5. Insulating tension pole
6. Strut porcelain
7. Chassis
8. Nameplate
9. CT19BW framework box
10. CT
11. Hand hole cover board

# ZN28(A)-12 Series Vacuum Circuit Breaker

## 1. Application

ZN28(A)-12 series vacuum circuit breakers are a kind of indoor high voltage switch device which is used in the AC three-phase power system of frequency 50Hz, rated voltage 12kV. This device is conformed to the standard GB1984-89.This device adopts unibody installation of operating mechanism and circuit breaker technology, which has two styles, respectively, ZN28-12 unibody structure and ZN28(A)-12 separable structure. it is suitable to various fixed switchgears, such as GG1A, XGN2A-10, etc.

This products can match with CD17 DC electromagnetic operating mechanism and CT19I, CD19II spring energy storage type operating mechanism.

## 2. Technical Parameter

| Item | Unit | Value | | | |
|---|---|---|---|---|---|
| Rated voltage | kV | 12 | | | |
| Rated current | A | 630,1000,1250 | 1250,1600 | 1250,1600,2000,2500 | 1600,2500,3150 |
| Rated short-circuit breaking current | kA | 20 | 25 | 31.5 | 40 |
| Rated short-circuit switch off current (virtual value) | kA | 50 | 63 | 80 | 100 |
| Rated peak withstand current (peak) | kA | 50 | 63 | 80 | 100 |
| Rated thermo stability current(valid) | kA | 20 | 25 | 31.5 | 40 |
| Rated thermo stability time | s | 4 | | | |
| Rated operations of short-circuit breaking current interruption | times | 30(50) | | | |
| Breaking time CD10 magnetic control mechanism | ms | <80 | | | |
| Rated operation sequence | | 0.3 | | | |
| Power frequency withstand voltage (1 min) | kV | 42(fracture 48) | | | |
| Impulse withstand voltage | kV | 75(fracture 85) | | | |
| Mechanical life | times | 10000 | | | |

## 3. Outline and Installation Dimension (mm)

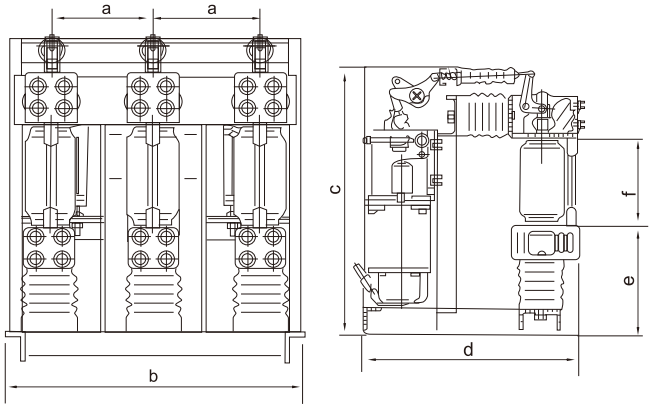


| Code \ Data \ Model | 20kA 25kA 31.5kA | 40kA |
|---|---|---|
| a | 230 | 275±1 |
| b | 600 | 690 |
| c | 707 | 842 |
| d | 560 | 652 |
| e | 293 | 342 |
| f | 227±1 | 227±1 |

# ZN63(VS1)-12 High Voltage Vacuum Circuit Breaker

## 1. Application

ZN63(VS1)-12 indoor high voltage vacuum circuit breaker is used in the three-phase AC power system of frequency 50Hz, rated voltage 12kV. It is applied in the grid equipment, the power distribution system of industrial and mining enterprises as well as the places where requires repeated opening short-circuit current and frequent operation.

This circuit breaker adopts unibody design of operating mechanism and circuit breaker technology, which can not only be used as fixed installation unit, but also can constitute the handcart unit with dedicated advanced mechanism.

ZN63(VS1)-12 is indoor medium-voltage solid type seal vacuum circuit breaker, ZN63(VS1)-12 vacuum breaker suitable for the insulation in the indoor air switch for 50Hz, rated voltage 12kV and below the grid from the control and protection, ZN63(VS1)-12 vacuum circuit breaker and the frequent need for short-circuit breaking current of occasions with very good performance, fully meet the requirements of automatic re-closing and have higher reliability and service life.

## 2. Technical Parameter

| No. | Item | | Unit | Value | | |
|---|---|---|---|---|---|---|
| 1 | Rated voltage | | kV | 12 | | |
| 2 | High test operating voltage | | kV | 12 | | |
| 3 | Rated current | | A | 630 | 630 | 1250 |
| 4 | Rated short-circuit breaking current | | kA | 20 | 25 | 31.5 |
| 5 | Rated short-circuit closing current | | kA | 50 | 63 | 80 |
| 6 | Rated peak withstand current | | kA | 50 | 63 | 80 |
| 7 | 4Srated short time withstand current | | kA | 20 | 25 | 31.5 |
| 8 | Rated insulation level | P.F.withstand voltage(Before and after the rated breaking) | kV | 42(Fracture48) | | |
| | | Impulse witstand voltage(Before and after the rated breaking) | kV | 75(Fracture84) | | |
| 9 | Rated operating order | | | O-0.3S-CO-180S-CO | | |
| 10 | Mechanical life | | times | 3000 | | |
| 11 | Rated short-circult breaking current breaking times | | times | 50 | | |
| 12 | Actuator Rated closing voltage(DC) | | V | 110,220 | | |
| 13 | Actuator Rated opening voltage(DC) | | V | 110,220 | | |
| 14 | Clearance between opencontacts | | mm | 11±1 | | |
| 15 | Supper Travel(Compressed length of contact springs) | | mm | 3.5±0.5 | | |
| 16 | Non corresponding time period between tri-phase opening and closing | | ms | ≤2 | | |
| 17 | Bounce time of closing contacts | | ms | ≤2 | | |
| 18 | Average time of opening | | s | 0.9~0.12 | | |
| 19 | Average time of closing | | s | 0.4~0.8 | | |
| 20 | Opening time | | ms | 50 | | |
| 21 | Closing time | | ms | 100 | | |
| 22 | Main loop resistance of each phase | | μΩ | 60 | 50 | |
| 23 | Allowed acumination thickness between moving contact and static contact | | mm | 3 | | |

## 3. Outline and Installation Dimension (mm)

Vacuum circuit breaker with chassis

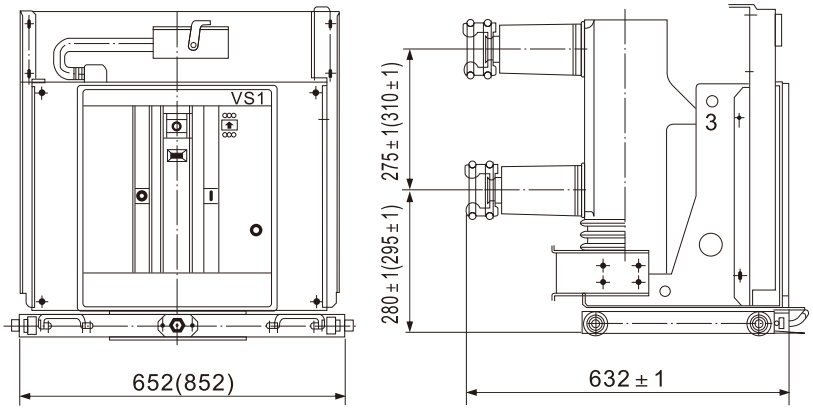

Vacuum circuit breaker without chassis

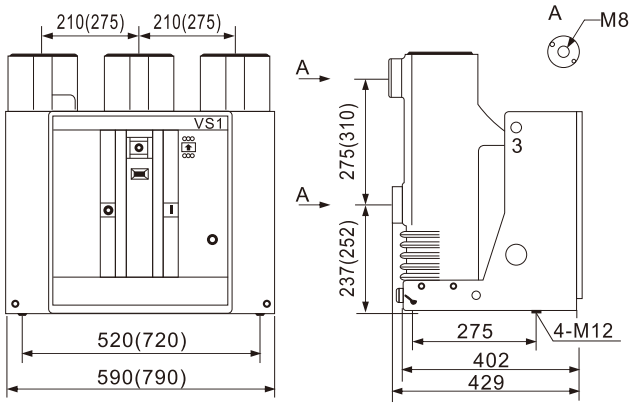


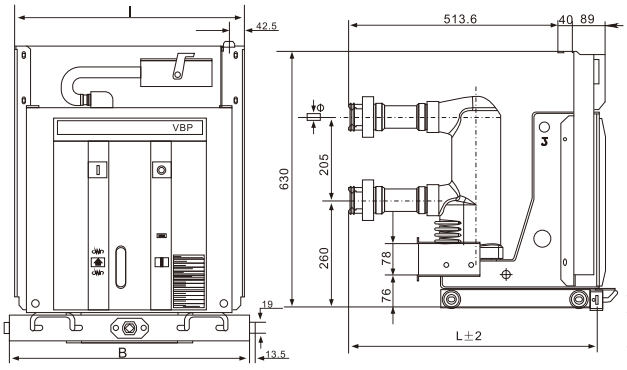


| Parameter | P | A | B | I | L | Φ |
|---|---|---|---|---|---|---|
| 630A~1250A | 150 | 502 | 503 | 498 | 609 | 35 |
| 20kA~31.5kA | 210 | 650 | 653 | 648 | 600 | 35 |

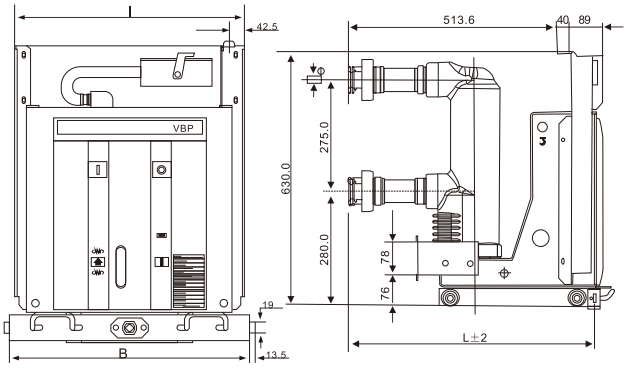


| Parameter | P | A | B | I | L | Φ |
|---|---|---|---|---|---|---|
| 630A~1250A | 210 | 650 | 653 | 648 | 609 | 35 |
| 20kA~31.5kA | 150 | 502 | 503 | 498 | 600 | 49 |

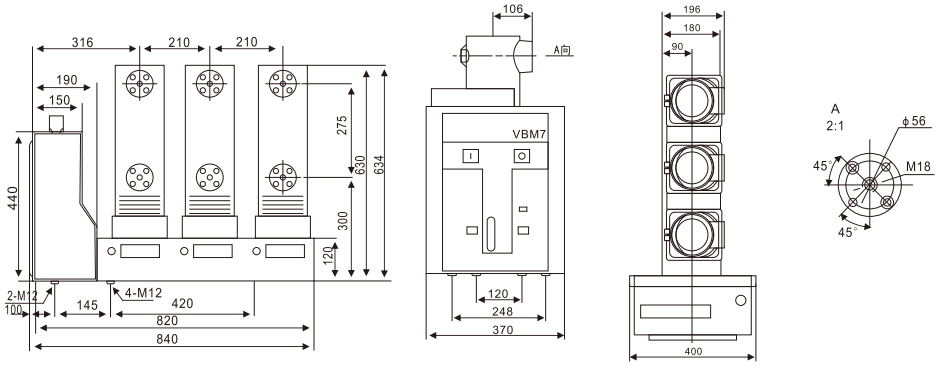

# ZN85-40.5G(3AV3)
# Indoor AC HV Vacuum Circuit Breaker

## 1. Application

ZN85-40.5G(3AV3) indoor AC HV Vacuum circuit breaker is applicable for power system with three-phase AC50Hz,40.5kV, used for industrial and mining enterprises, power plants and transformer transformer substations to protect and control equipemnts, also, it can be used in the location where with frequent operating.

## 2. Type and Meaning

ZN 85 - 40.5G / 2000 - 31.5

- 31.5 — Rated short circuit breaking current
- 2000 — Rated current
- 40.5G — Rated voltage
- 85 — Design No.
- ZN — Indoor vacuum circuit breaker

## 3. Service Environment

Environmental temperature is from:-15~40°C;
Environmental humidity:
Daily average relative humidity≤95%
Monthly average relative humidity≤90%
Earthquake intensity≤8
Keep away from such environment as subject to dust, dirt, smog, corrosive of flammable gas, vapor and salt pollution.

## 4. Technical Parameter

| Item | Unit | Value |
|---|---|---|
| Rated voltage | kV | 40.5 |
| 1 min power frequency withstand voltage (virtual value) | kV | 95 |
| Lighting impulse withstand voltage (peak) | kV | 185 |
| Rated frequency | Hz | 50 |
| Rated current | A | 1250,1600,2000 |
| Rated short-time withstand current | kV | 25 31.5 |
| Rated peak withstand current | kV | 63 80 |
| Rated short circuit duration | S | 4 |
| Rated short-circuit breaking current | kA | 25 31.5 |
| Rated short-circuit making current | kA | 63 80 |
| Rated operating sequence | | 0-0.3s-CO-180s-CO |
| Break time | ms | <80 |
| Rated short-circuit breaking current times | times | 20 |
| Rated breaking current of capacitor bank | A | 630 |
| Rated back-back capacitor bank drop-out current | A | 400 |
| Rated operating voltage | V | -110/~110 -220/~220 |
| Mechanical endurance | | 10000 |

## 5. Structrue Feature

The arc-extinguish chamber is on the upper part and the mechanism is on the lower part. This structure is convenient for debug .

Complex insulating structure using air and organic material; Compactable dimension and small weight.

Vacuum arc-extinguish chamber of Cutler-Hammer Company (USA) and domestic ZMD are both appli cable for th e VCB. Both two kinds of chambers extinguish arc by vertical magnetic field and featuring with low cut-off and good on-off capability with asymmetry.

Simple spring operation mechanism is free from maintenance within 10000 times of operations.

Lead-screw propeller, easy and stable operation and good self-locking capability.

## 6. Outline and Installation Dimension (mm)

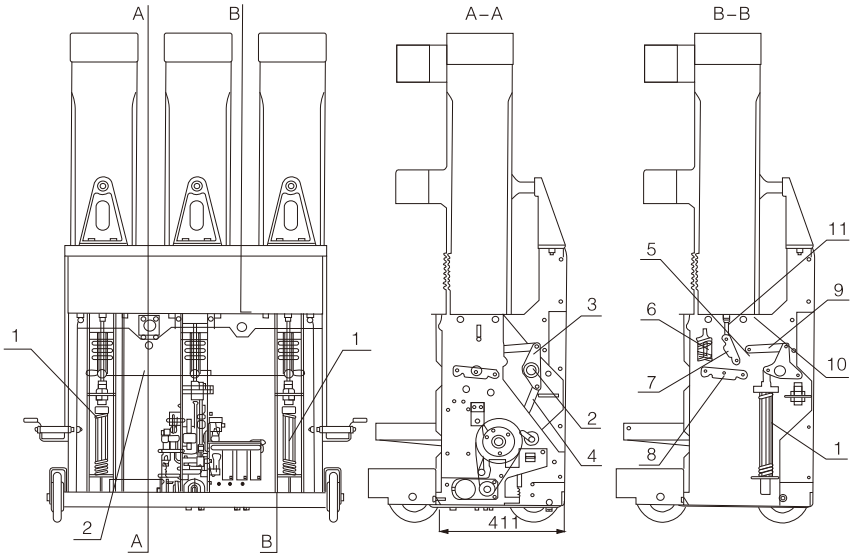


1. Break-brake spring
2. Large shaft
3. Middle connecting lever
4. Transmission rod
5. Drive connecting plate
6. Contact spring
7. Drive connecting plate3
8. Drive connecting plate4
9. Drive connecting plate1
10. Side connecting lever
11. Rod end joint bearing

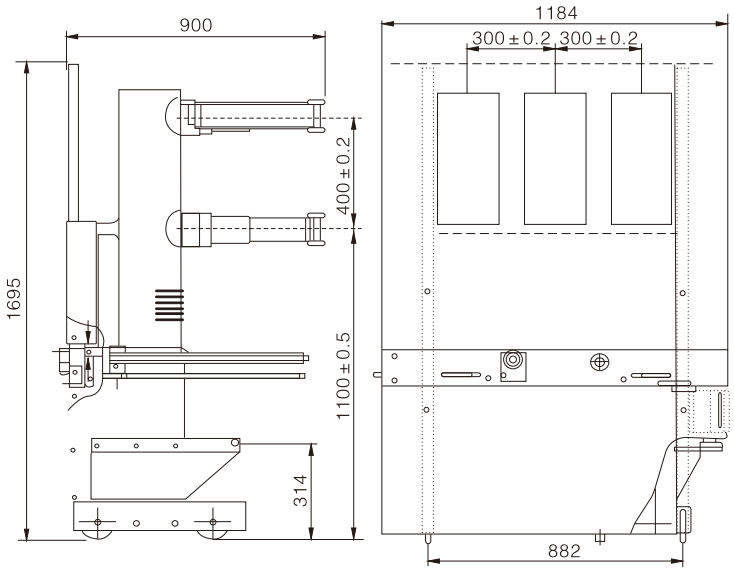

# FZ(R)N25-12 Indoor AC High Voltage Vacuum Load Switch

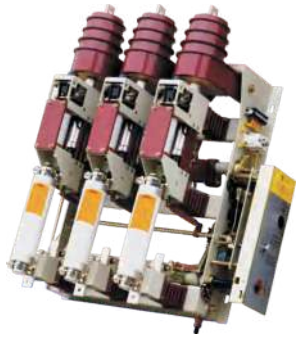

## 1. Application

FZN25-12D/T630-20 Type Indoor AC switch is three-phase AC 50Hz, rated voltage of 12kV and indoor installations, for industrial and mining enterprises for distribution in clinics and substations and other occasions, as electrical protection and control facilities for the division and load current, loop current, no load transformer and cable charging current.

FZRN25-12D/T200-31.5 type indoor AC high voltage vacuum load switch- fuse combination units is three-phase AC 50Hz, rated voltage of 12kV for indoor installations for industrial and mining enterprises and other occasions to change the station distribution Institution for load control and short circuit protection purposes. Equipped with grounding switch can withstand short-circuit current. Actuator can be manual and electric, easy remote control three power system requirements.

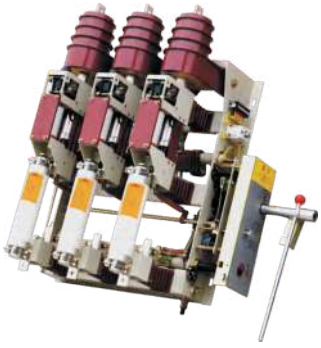

FZN25-12D, FZRN25-12D-type load switch and the combination of electric three-phase are for city distribution and industrial power equipment of three phase ring network or terminal power supply ,for load control and short circuit protection. As the combination of electrical transformers and other electrical equipment on the protective effect than the circuit more reliable, more economical, especially for rings, double radiation power supply units and box-type substation.

## 2. Technical Parameter

| No. | Item | | Unit | Value | |
|---|---|---|---|---|---|
| | | | | FZN25-12D/T630-20 | FZN25-12D/T125-31.5 |
| 1 | Rated voltage | | kV | 12 | |
| 2 | Rated frequency | | Hz | 50 | |
| 3 | Rated current | | A | 630 | 125 |
| 4 | Rated insulation level | 1min power frequency withstand voltage (effective value) | kV | Arc-quenching chamber fracture 30 | |
| | | | | Earth ,phase 42, insulating fracture 48 | |
| | | Lightning impulse withstand voltage (peak) | kV | Earth ,phase 75, insulating fracture 85 | |
| 5 | Rated dynamic current (peak) | | kA | 50 | - |
| 6 | 4S thermal current | | kA | 20 | - |
| 7 | Rated power load breaking current | | A | 630 | 125 |
| 8 | Rated closed-loop breaking current | | A | 630 | 125 |
| 9 | Rated cable charge breaking current | | A | 10 | 10 |
| 10 | Rated breaking no-load transformer capacity | | kVA | 1600 | 1600 |
| 11 | Rated open circuit breaking current | | KA | - | 31.5 |
| 12 | Rated transfer current | | A | - | 2000 |
| 13 | Fuse model | | | - | SDLAJ-12, SFLAJ-12 |
| 14 | Striker output energy | | J | - | 2-5 |
| 15 | Rated short-circuit closed current | | kA | 50 | |
| 16 | Earth switch rated dynamic current | | kA | 50 | |
| 17 | Earth switch 2s thermal current | | kA | 20 | |
| 18 | Auxiliary circuit rated voltage | | V | AC DC220 | AC DC110 |
| 19 | Mechanical life | | times | 10000 | |

## 3. Outline and Installation Dimension (mm)

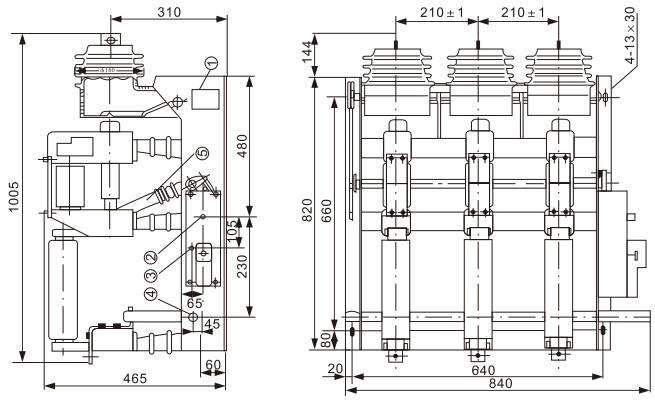


1.nameplate
2.Energy storage shaft
3.trip
4.Grounding knife shaft
5. Operating lever

# FKN12-12(R)Air High Voltage Load Break Switch With Fuse

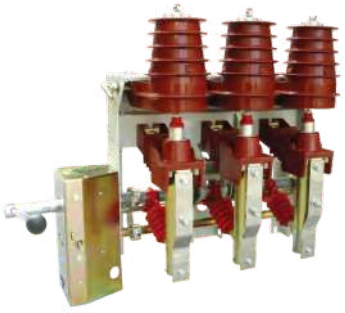

## 1. Application

FKN12-12D/630-20 air high voltage load break switch with fuse is a three phase high voltage switch equipment of 12kv,50hz for breaking or closing load current, loop closed current. no-load transformer and cable charging electric current, close short circuit current. The load switch with earthing switch can bear short-circuit current.

FKN12-12RD/125-31.5 air high voltage load break switch-- fuse-combination unit is made of FKN2-12D load switch and S□LAJ-12(XRNT□-12) H.V current-limiting fuse box. It can be a reliable short-circuit breaking current up to any current: breaking work load switch current, fuse short-circuit breaking current breaking joint working between the current and the full short-circuit current in any over-current, while fuse allows, through its impact load switch sub-gate.

## 2. Using Condition

a. Ambient temperature -25℃-+40℃
b. Elevation≤1000m
c. Humidity:daily average humidity≤95%,monthly≤90%
d. No risk of fire, explosion, serious pollution, chemical corrosion and severe vibration
e. Pollution degree: II
If use out of above condition,please contact with the manufacture

## 3. Technical Parameter

| No. | Item | Unit | FKN-12D/630-20 | FZN-12R.D/125-31.5 |
|---|---|---|---|---|
| 1 | Rated voltage | kV | 12 | |
| 2 | Rated frenquence | Hz | 50 | |
| 3 | Rated amper | A | 630 | 125 |
| 4 | Thunder voltage | kV | Isolation:85 | |
| 5 | 1min Voltage | kV | Earthing 42,Isolation:48 | |
| 6 | Amper | kA | 20(4S) | |
| 7 | Stable current | kA | 50 | |
| 8 | Current | kA | 50 | - |
| 9 | Breaking current | kA | - | 31.5 |
| 10 | Moving current | kA | - | 1.5 |
| 11 | Breaking amper | kA | 1.8 | |
| 12 | Transformer capacity | kVA | 1250 | |
| 13 | Power charge current | A | 10 | |
| 14 | Breaking times | times | >100 | |
| 15 | Breaking time | S | - | >0.06 |
| 16 | Current | kA | 20(2S) | 20(2S) |
| 17 | Earthing switch voltage | kA | 50 | 50 |
| 18 | Motor voltage | V | AC220, DC48 | |

## 4. Outline and Installation Dimension (mm)

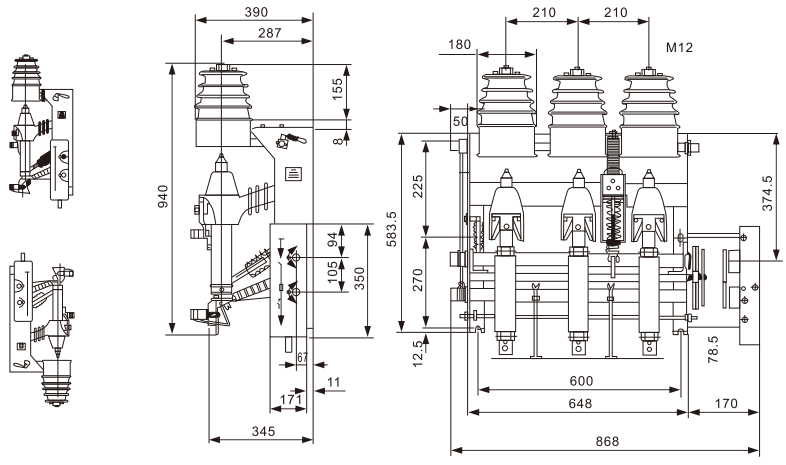

## GW Series Outdoor High Voltage Disconnecting Switch

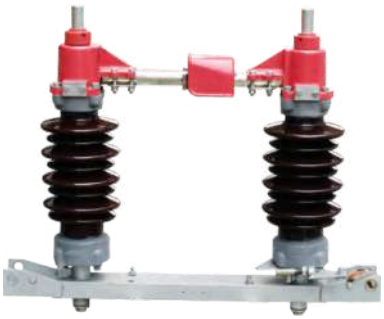

GW4-40.5KV perfect COMPLETE
Outdoor High voltage Disconnecting Switch

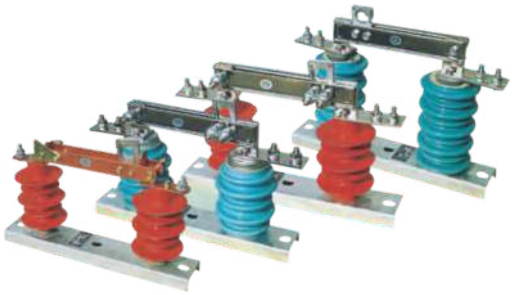

(H)GW9-12 series
outdoor High Voltage Disconnecting Switch

## GN Series Indoor Type High Voltage Isolator Switch

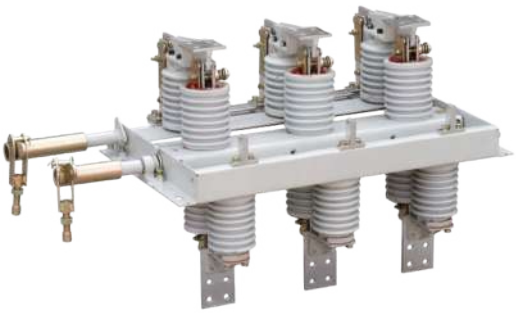

GN30-12 series
Indoor Rotary High Voltage Disconnecting Switch

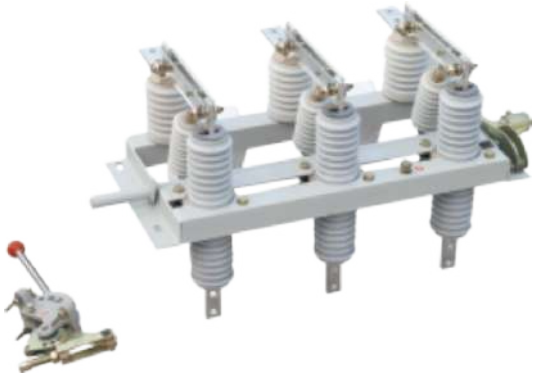

GN19-12 series
Indoor High Voltage Disconnecting Switch

## JN Series Indoor High Voltage Ground Switch

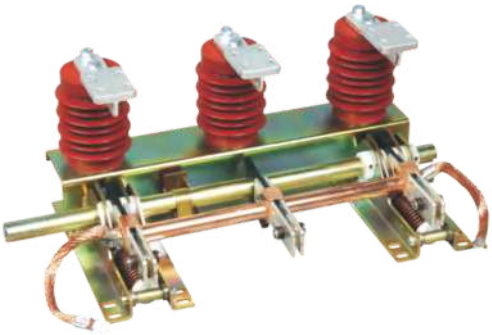

JN15-12/31.5 series
indoor High Voltage ground switch

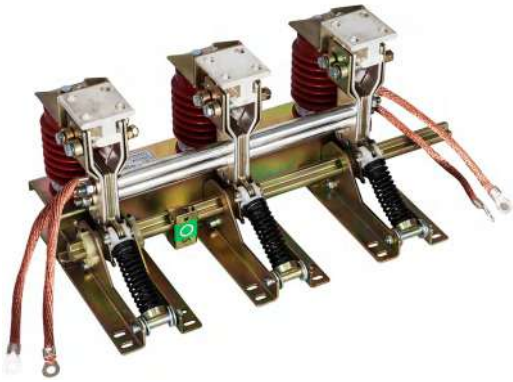

JN15-12/40 series
indoor High Voltage ground switch

# HY series Polymer type Zinc Oxide Lightning Arrester

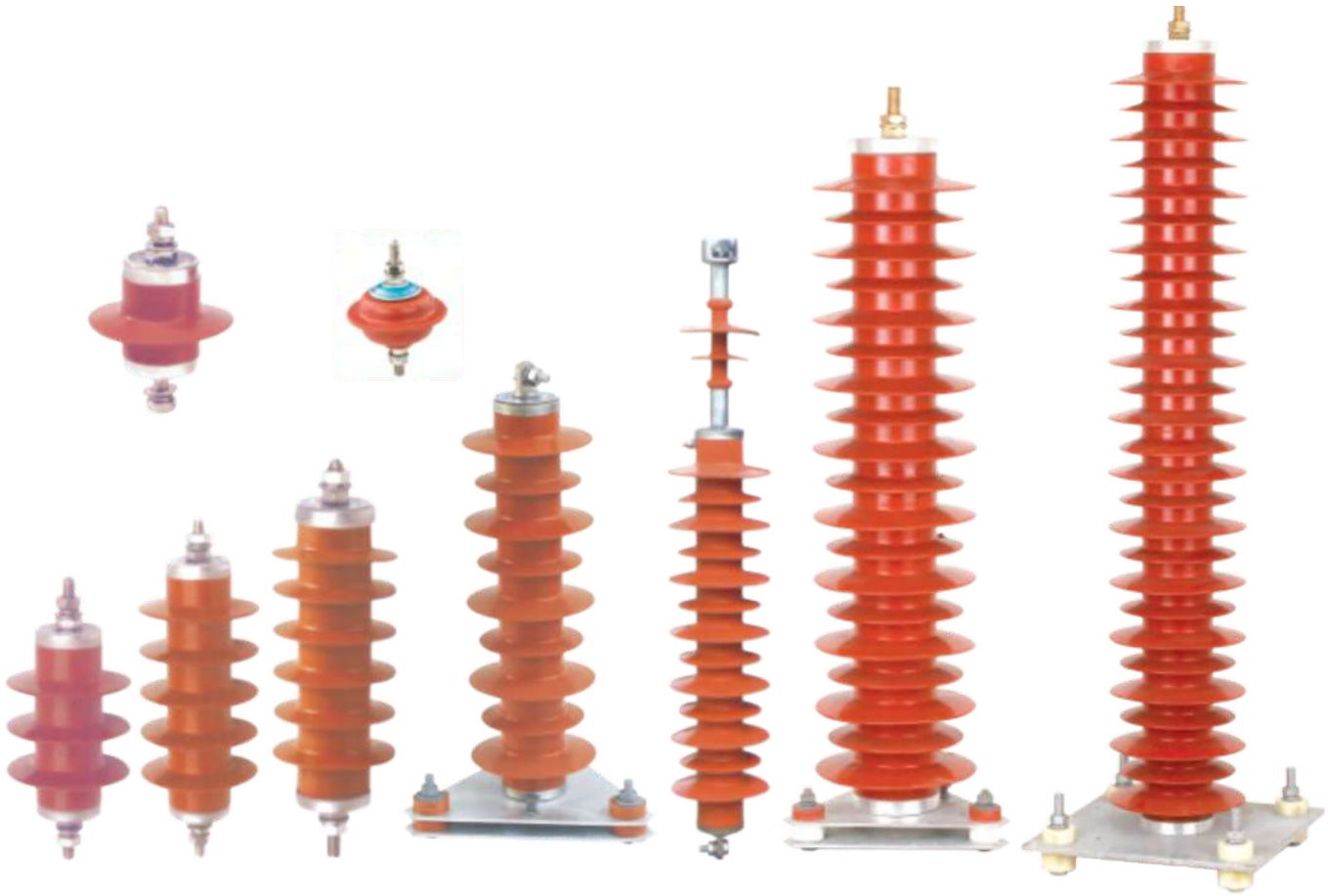

## Outline and Installation Dimension (mm)

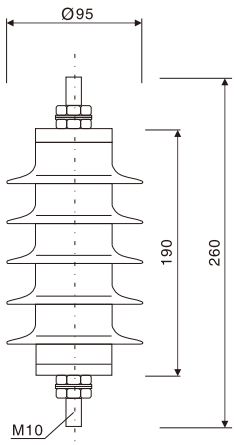


HY5WS-10KV

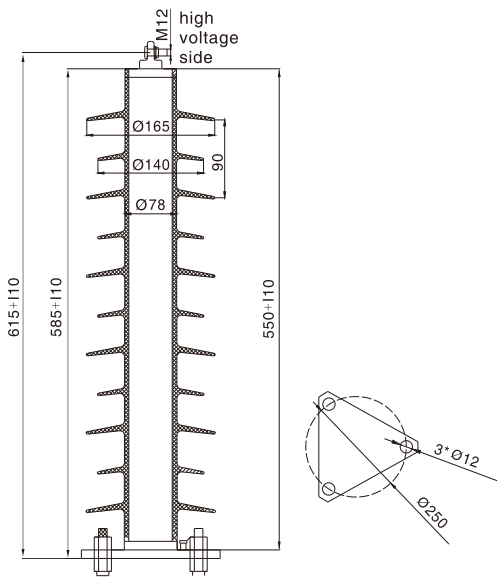


HY5WZ-51/134KV

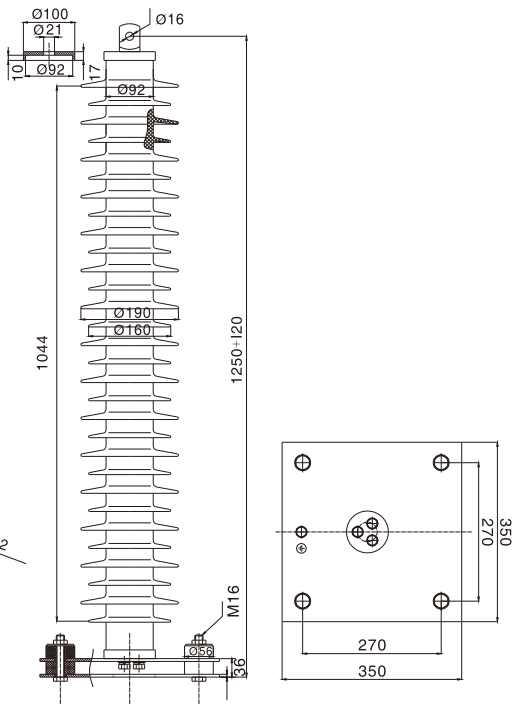


HY10W-110KV